DIDACTIC MANUAL

FAMILY:	Wall-hung condensing boilers
GROUP:	Instantaneous type with forced draught
MODELS:	***Delfis-Antea Condensing***
VERSIONS:	For indoor installation
PART NO.:	AST 14 C 258/00

1st Edition, February 2013

ENGLISH

fondital

BRAND NAME

NOVA FLORIDA

Contents

SECT. 1
TECHNICAL CHARACTERISTICS

1.1 MODELS

DELFIS-ANTEA Condensing KC 24 – 28
DELFIS-ANTEA Condensing KRB 12- 24 - 28

ABBREVIATION KEY:

K: condensing
C: combined
RB: heating-only, with internal three-way valve for integration with DHW tank heater

MAIN CHARACTERISTICS:

- DELFIS-ANTEA Condensing Line Tech **KC 24 - 28**:
  Condensing **combined instantaneous** boiler for indoor installation, domestic hot water + heating, s ealed chamber, forced draught, mono-thermal with plate exchanger.
- DELFIS-ANTEA Condensing Line Tech **KRB 12 - 24 - 28**:
  heating-only condensing **boiler for indoor installation, with three-way valve** for integration with DHW tank heater, sealed chamber, forced draught, mono-thermal

1.2 OVERALL DIMENSIONS

Height H = 700 mm

Width L = 400 mm

Depth D = 250 mm

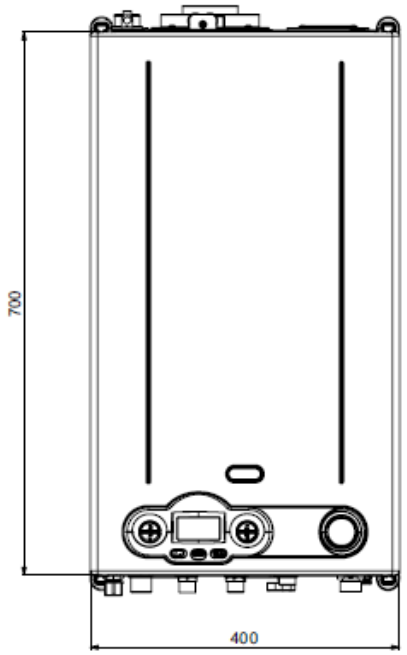

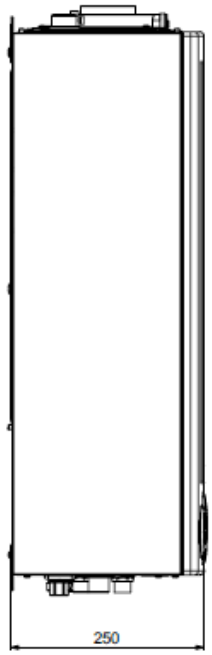

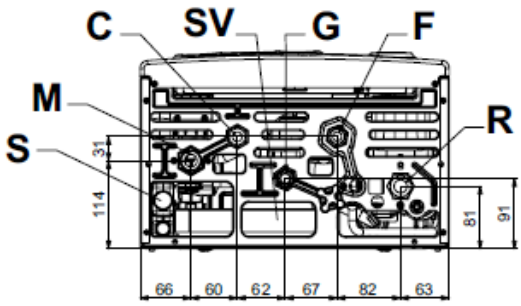

bottom view

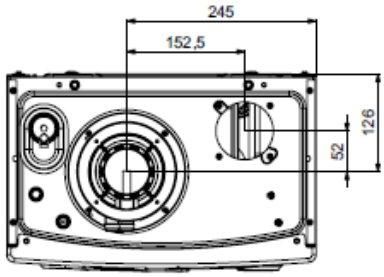

top view

G	Gas inlet (1/2")
M	CH flow (3/4")
C	DHW outlet (1/2")
F	Cold water inlet (1/2")
R	CH return (3/4")
S	Condensate drain
SV	3-bar safety valve drain cock

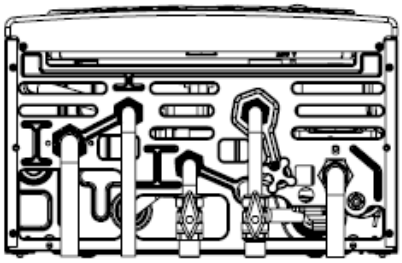

Dimensions for connection to base hydraulic kit (option)

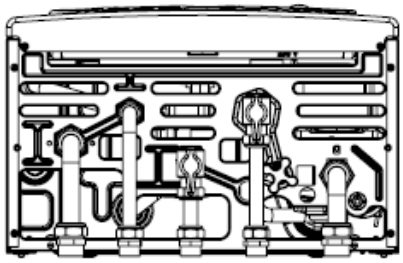

Dimensions for connection to "plus" hydraulic kit (option)

INSTALLATION TEMPLATE

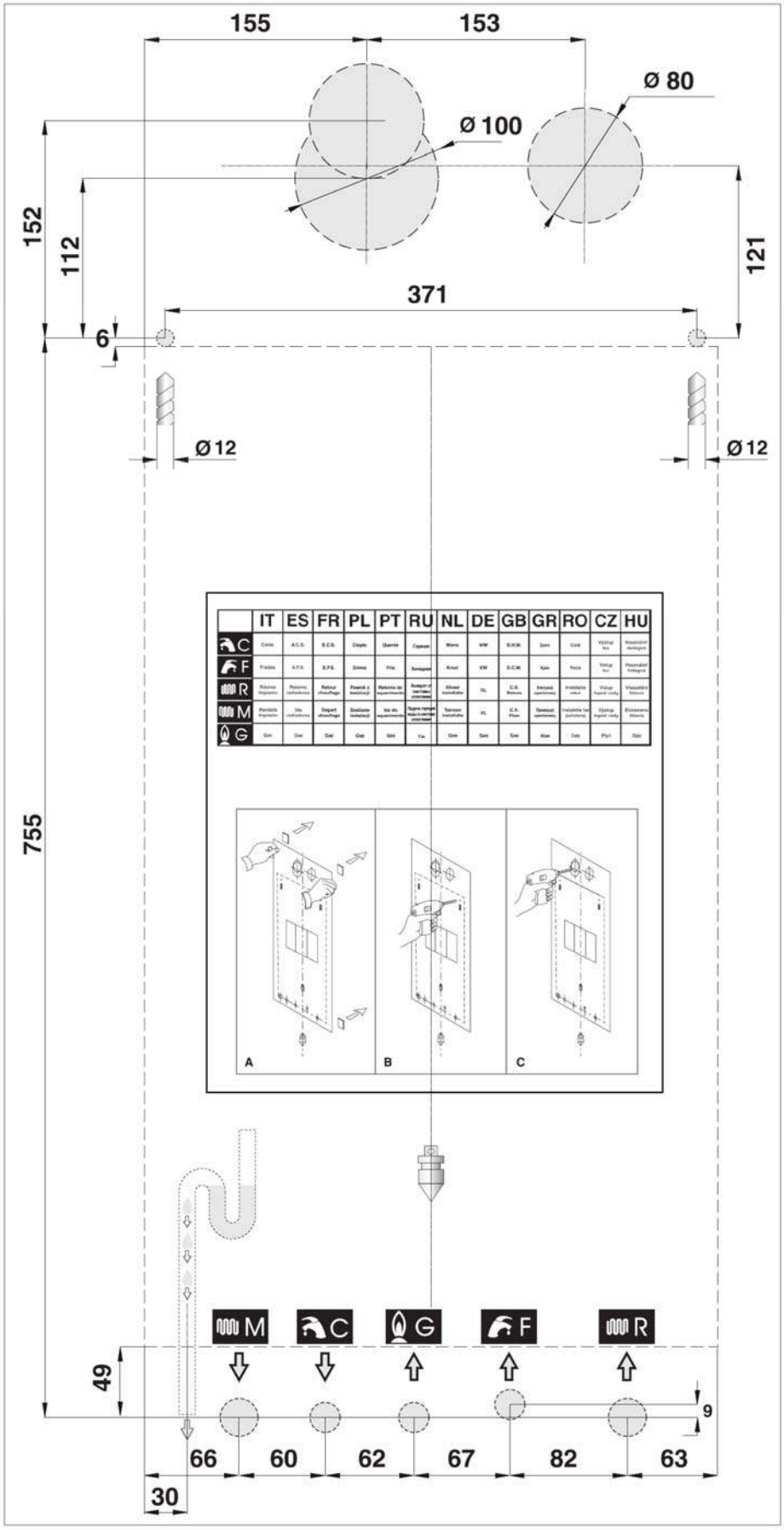

1.3 TECHNICAL SPECIFICATIONS

General Characteristics

		KRB 12	KC-KRB 24	KC-KRB 28
Operating parameters				
Equipment category		II2H3P		
Burner nozzles	n°	2		
Minimum CH circuit flow rate	l/h	400		600
CH circuit min. pressure	bar	0,5		
CH circuit max. pressure	bar	3		
DHW circuit min. pressure	bar		0,5	
DHW circuit max. pressure	bar		6	
DHW specific flow rate Δt 30°C	l/min		13,5	15
Double flow probe triggering temperature OFF	°C	105		
Double flow probe triggering temperature ON	°C	90		
Flue gas thermostat triggering temperature	°C	105		
Standard central heating setting range	°C	20 ÷ 78		
Maximum CH working temperature	°C	20 + 45		
DHW setting range	°C		35 ÷ 57	
Maximum DHW working temperature	°C	35 ÷ 65		
Total capacity of expansion vessel	l	9		
Maximum recommended system capacity (**)	l	200		
Nominal electrical data				
Electric Power Supply: Voltage / Frequency	V – Hz	230-50		
Power mains supply fuse	A	2		
Electric cabinet protection degree	IP	X4D		
Max. absorbed power	W	131		133
Electric power in standby condition	W	1,2		
Overall dimensions and connections				
Height	mm	700		
Width	mm	400		
Depth	mm	250		
Gas connection	-	G ½		
Flow and return connection	-	G ¾		
Cold water and hot domestic water connection	-	G ½		
Consumption				
Natural gas consumption (*)	m^3/h	1,27	2,51	2,8
Propane gas consumption (*)	kg/h	0,93	1,84	2,1
Operating characteristics				
Type of ignition	-	Elettronica		
Flame surveillance	-	Ionizzazione		
Type of detection	-	Non polarizzata fase-neutro		
Hot DHW production	-	Boiler	Istantanea *(KC)* boiler *(KRB)*	

(*) Value related to 15°C - 1013 mbar condition
(**) Maximum water temperature at 83°C, vessel preloaded at 1 bar.

Design data and chimney sizing

KRB 12

		Pmax.	Pmin.	Carico al 30 %
Casing heat loss with burner off	%	0,55		-
Casing heat loss with burner on	%	0,26	7,78	-
Flue system heat loss with burner on	%	2,64	1,92	-
Flue (natural gas) mass flow	g/s	8,25	0,89	-
Flue gas temp. – air temp.	°C	57,9	34,5	-
CO2 value (natural gas - propane)	%	9,0	9,3	-
Heat output efficiency rating (60/80°C)		10,0	10,3	-
Heat output efficiency rating (30/50°C)	%	97,1	90,3	-
Efficiency rating (according to 92/42/EC)	%	105,1	105,0	106,0
Nox emission class	-	★★★★		
Casing heat loss with burner off	-	5		

KC-KRB 24

		Pmax.	Pmin.	Load at 30 %
Casing heat loss with burner off	%	0.28		-
Casing heat loss with burner on	%	0.97	6.49	-
Flue system heat loss with burner on	%	2.62	2.09	-
Flue (natural gas) mass flow	g/s	12.43	1.33	-
Flue gas temp. – air temp.	°C	61	33	-
CO2 value (natural gas - propane)	%	9.0 – 10.0	9.3 – 10.0	-
Heat output efficiency rating (60/80°C)	%	96.7	91.4	-
Heat output efficiency rating (30/50°C)	%	105.1	104.9	106.5
Efficiency rating (according to 92/42/EC)	-	★★★★		
Nox emission class	-	5		

KC-KRB 28

		Pmax.	Pmin.	Load at 30 %
Casing heat loss with burner off	%	0.25		-
Casing heat loss with burner on	%	1.40	5.70	-
Flue system heat loss with burner on	%	2.40	2.00	-
Flue (natural gas) mass flow	g/s	13.93	1.47	-
Flue gas temp. – air temp.	°C	60	45	-
CO2 value (natural - propane)	%	9.0 – 9.7	9.3 – 10.3	-
Heat output efficiency rating (60/80°C)	%	96.4	92.3	-
Heat output efficiency rating (30/50°C)	%	105.5	104.5	107
Efficiency rating (according to 92/42/EC)	-	★★★★		
Nox emission class	-	5		

Settings

KRB 12

	Heat capacity	Thermal Power MIN-MAX	Supply pressure	Nozzle diameter	Flue gas MIN-MAX
	(kW)	(kW)	(mbar)	(mm)	(%)
gas metano G20	12	1,8 – 11,6 *(60-80°C)* 2,1 – 12,7 *(30-50°C)*	20	3,05	9,3 ÷ 9,0
gas propano G31	12		37	2,5	10,3 ÷ 10,0

KC-KRB 24

	Heat capacity	Thermal Power MIN-MAX	Supply pressure	Nozzle diameter	Flue gas MIN-MAX
	(kW)	(kW)	(mbar)	(mm)	(%) +/- 0.1
Natural gas G20	23.7	2.7 – 22.9 *(60-80°C)* 3.2 – 24.9 *(30-50°C)* 3.0 – 27.4 *(DHM)*	20	3.7	9.3 TO 9.0
propane gas G31	23.7		37	3.0	10.0 to 10.0

KC-KRB 28

	Heat capacity	Thermal Power MIN-MAX	Supply pressure	Nozzle Diameter	Flue gas MIN-MAX
	(kW)	(kW)	(mbar)	(mm)	(%)
Natural gas G20	26.4	3.0 – 25.4 *(60-80°C)* 3.45 – 28.1 *(30-50°C)* 3.0 – 29.2 *(DHM)*	20	4.0	9.3 TO 9.0
propane gas G31	26.4		37	3.3	10.3 to 10.0

SECT. 2

CONTROL PANEL AND DIAGNOSTICS

2.1 USER'S INTERFACE

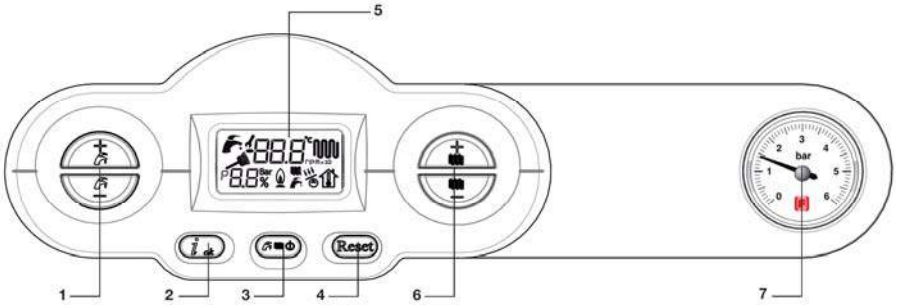

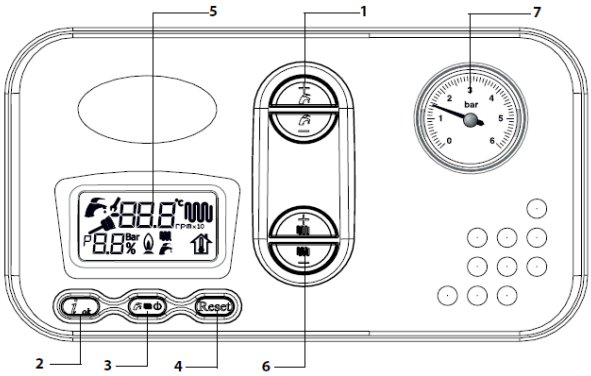

1. Set domestic hot water temperature

These keys are used to set (increase or decrease) the domestic hot water temperature within a range from 35°C to 60°C.

2. Recall information and confirm parameters

This key is used to scroll the sequence of the values of some parameters (see following paragraphs). It is also used to confirm the edited parameters setting.

3. Select boiler state

Press this key to set the following functions.
SUMMER :
Boiler produces domestic hot water, only.
WINTER :
Boiler provides both central heating and domestic hot water.
CENTRAL HEATING ONLY :
Boiler provides central heating water only.
STANDBY ***OFF***:
Boiler in standby mode: central heating and DHW functions are disabled.

4. Resume boiler function

This key allows to reactivate the boiler operation after a shutdown, except for errors E89, E90 and E91 (for these errors refer to paragraph on page 13).

5. LCD

The LCD shows the boiler status and operation information (see the following paragraph).

6. Set central heating water temperature

These keys set (increase or decrease) the water temperature value of the heating system between 20°C to 45°C (*reduced range*) or 78°C (*standard range*).

7. Water pressure gauge

This shows the pressure of the heating system water.

2.2 LCD

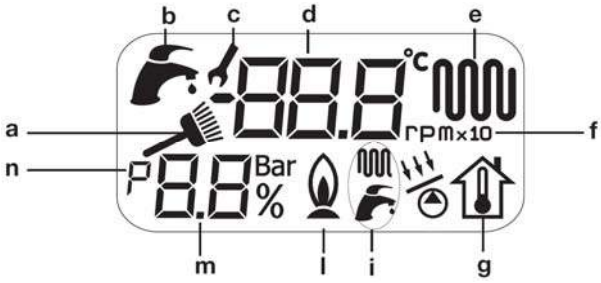

a. Flue cleaning function indicator
It illuminates flashing when the flue cleaning function is enabled by pressing keys **2** and **4** at the same time (see previous paragraph). When this function is ON, boiler flow temperature and fan rpm are displayed.

b. DHW indicator
This comes on when the boiler is in DHW mode.
It flashes when setting the DHW temperature with the keys **1** (see previous paragraph).

c. Parameter editing indicator
It comes on when entering into the parameter setting mode (in this case the symbol **n** turns on at the same time). The parameter and value identification screens flash alternatively.

d. Alphanumeric indicator
This shows the following:
- flow temperature during "*heating*" function;
- central heating water temperature setting;
- domestic hot water temperature during the "*DHW*" function;
- domestic hot water temperature setting;
- boiler status;
- boiler diagnosis.

e. Central heating indicator
This comes on when the boiler is in CH mode.
Flashes when setting the CH temperature with adjuster **6** (see previous paragraph).

f. Fan rpm indicator
It turns on together with the symbol **a** when the flue cleaning function is active. The flow temperature and the fan rpm are displayed alternatively.

g. Fictitious room temperature indicator
When an external probe is installed, this indicator flashes when the fictitious room temperature is set via keys **6**.

i. Boiler status indicator
Icons indicate which operating modes are enabled:
SUMMER: only icon lit
SUMMER and WINTER: both icons lit
CENTRAL HEATING ONLY: only icon lit
STANDBY: icon ***OFF*** lit

l. Flame lighting indicator
This comes on when the burner flame is present.

m. Parameter indicator
Figures to view and edit parameters.
It indicates the working burner current power rate.

n. Parameter indicator
It turns on when entering the parameter setting mode.

2.3 BOILER STATUS AND FAULT CODES

Normal operation

Boiler in STANDBY mode.	OFF
Boiler in SUMMER mode *No active function* The flow water temperature is displayed	52.0°C
Boiler in SUMMER or WINTER mode *No active function* The flow water temperature is displayed	51.0°C
Boiler in CENTRAL HEATING ONLY mode *No active function* The flow water temperature is displayed	52.0°C
Boiler in SUMMER mode *DHW function active* with flame lit The hot domestic water temperature and the burner power rate percentage are displayed	52.1°C 80%
Boiler in SUMMER or WINTER mode *DHW function active* with flame lit The hot domestic water temperature and the burner power rate percentage are displayed	52.1°C 80%
Boiler in SUMMER or WINTER mode *CH function active* with flame lit The flow temperature and the burner power rate percentage are displayed	68.5°C 60%
Boiler in WINTER mode *CH function active* with flame lit The flow temperature and the burner power rate percentage are displayed	68.5°C 60%

Malfunction, errors to be reset by the user and self-resettable faults

The display indicates the fault according to the relevant error code (see following table). Some of such faults can be reset by the user pressing the "rest" key (r), some others are self-resettable (a):

Boiler shutdown due to flame absence (r)	E01
Boiler shutdown due to double flow probe triggering (r)	E02
Boiler shutdown due to flue gas thermostat triggering (r)	E03
Boiler shutdown due to water pressure switch triggering (a)	E04
Boiler shutdown due to flow probe fault (a)	E05
Boiler shutdown due to DHW probe fault (a)	E06
Boiler shutdown due to flue gas probe fault (a)	E07
Boiler shutdown due to failure of the tank heater probe (KRB)	E12
External probe fault (a)	E23
Solar collector probe (SCS) fault (a)	E24
Solar valve probe (SVS) fault (fa)	E27
Solar tank heater probe (SBS) fault (a)	E28
Boiler shutdown due to return probe fault (a)	E15
Remote control connection fault (a)	E31
Shutdown due to mixed zone safety thermostat triggering (a)	E35
Failure on flow probe of mixed zone (a) (showing the zone number)	E36 02
Boiler shutdown due to fan fault (r)	E40

No communication between additional boards (f)	E41
Plumbing configuration not allowed	E42
Shutdown due to safety circuit hardware failure	E51
	E52
	E53
Boiler shutdown due to ΔT max deviation error (r)	E80
Shutdown due to heating fluid circulation malfunction* (r) or (f)	E81
Shutdown due to heating fluid circulation malfunction* (r) or (f)	E82
Shutdown due to heating fluid circulation malfunction* (r) or (f)	E83
Shutdown due to heating fluid circulation malfunction* (r) or (f)	E84
Shutdown due to max. flow derivative threshold exceeded (r)	E86
Shutdown due to max. return derivative threshold exceeded (r)	E87
Power reduction due to high flue gas temperature* (f)	E88
Maximum number of remote reset attempts reached (r)	E99

***** Errors E81-82-83-84 and 88 are not displayed in real-time but memorised in the shutdown counting (from P51 to P55).

Malfunction, errors that can be reset by technical service only

To reset particularly serious shutdowns (see following table) it is necessary to call the technical service.
It is necessary to contemporaneously press the three keys indicated below. Then the wrench icon is displayed and this indicates the possibility to reset the boiler with the usual "reset" key.

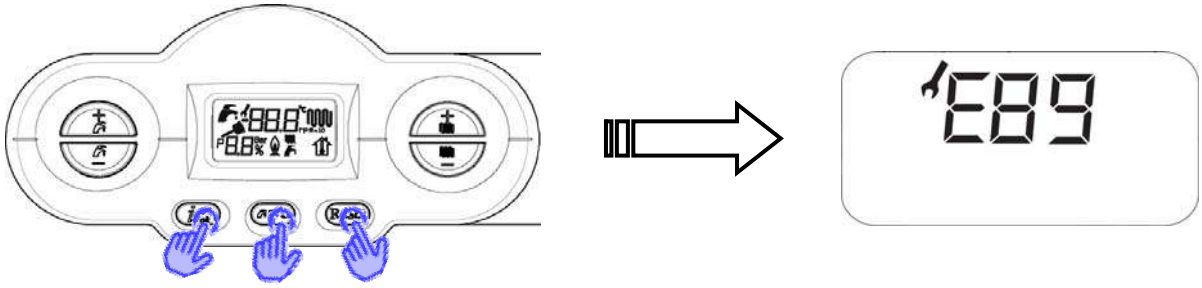

Flue gas temperature lower than the return one	E89
Flue gas maximum threshold exceeded	E90
Flue gas maximum derivative exceeding alarm	E91

SECT. 3

HYDRAULIC DIAGRAMS AND COMPONENTS

3.1 HYDRAULIC DIAGRAMS

KC

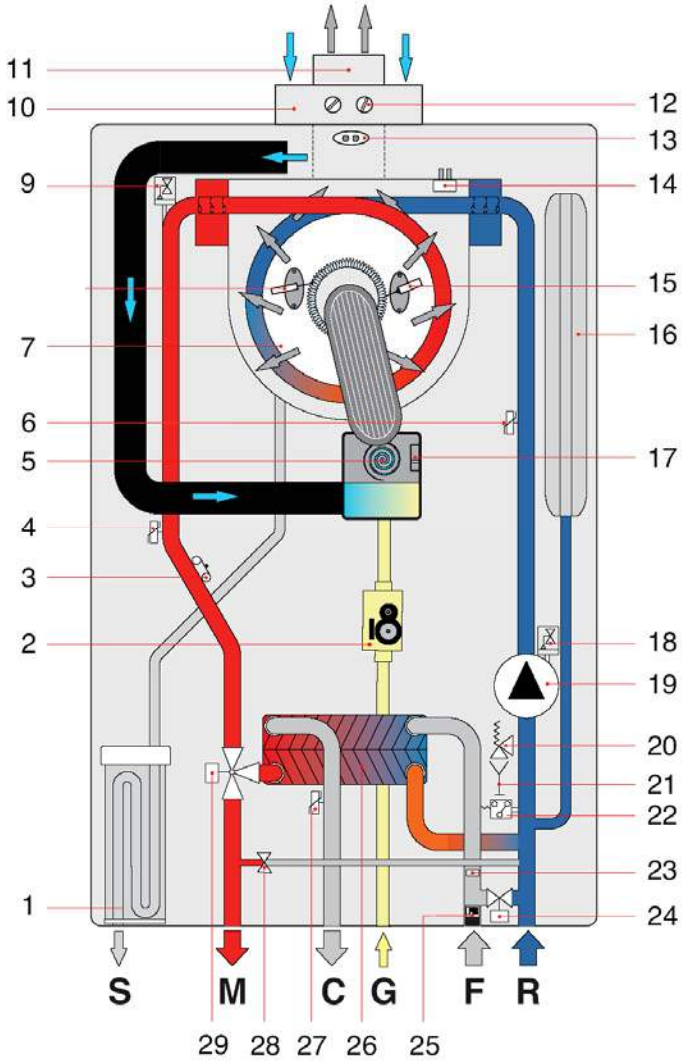

1. Condensate trap
2. Modulating gas valve
3. CH temperature probe 1
4. CH temperature probe 2
5. Modulating fan
6. Return temperature sensor
7. Primary condensing exchanger
9. Deaerator
10. Combustion air intake system
11. Flue gas vent system
12. Flue gas analysis ports
13. Flue gas thermostat on vent duct
14. Flue gas thermostat on exchanger
15. Ignition/detection electrode
16. Expansion vessel
17. Fan control sensor
18. Deaerator
19. Circulation pump
20. 3-bar safety valve
21. Discharge tap
22. Minimum pressure switch
23. 13-14 l/min flow-limiting device
24. Filler cock
25. Cold water flow switch with filter
26. Secondary plate exchanger
27. DHW probe
28. Automatic by-pass
29. Motorised 3-way valve

S Condensate drain
M Heating system flow
C DHW outflow
G Gas intake
F Cold water inlet
R Central heating system return

KRB

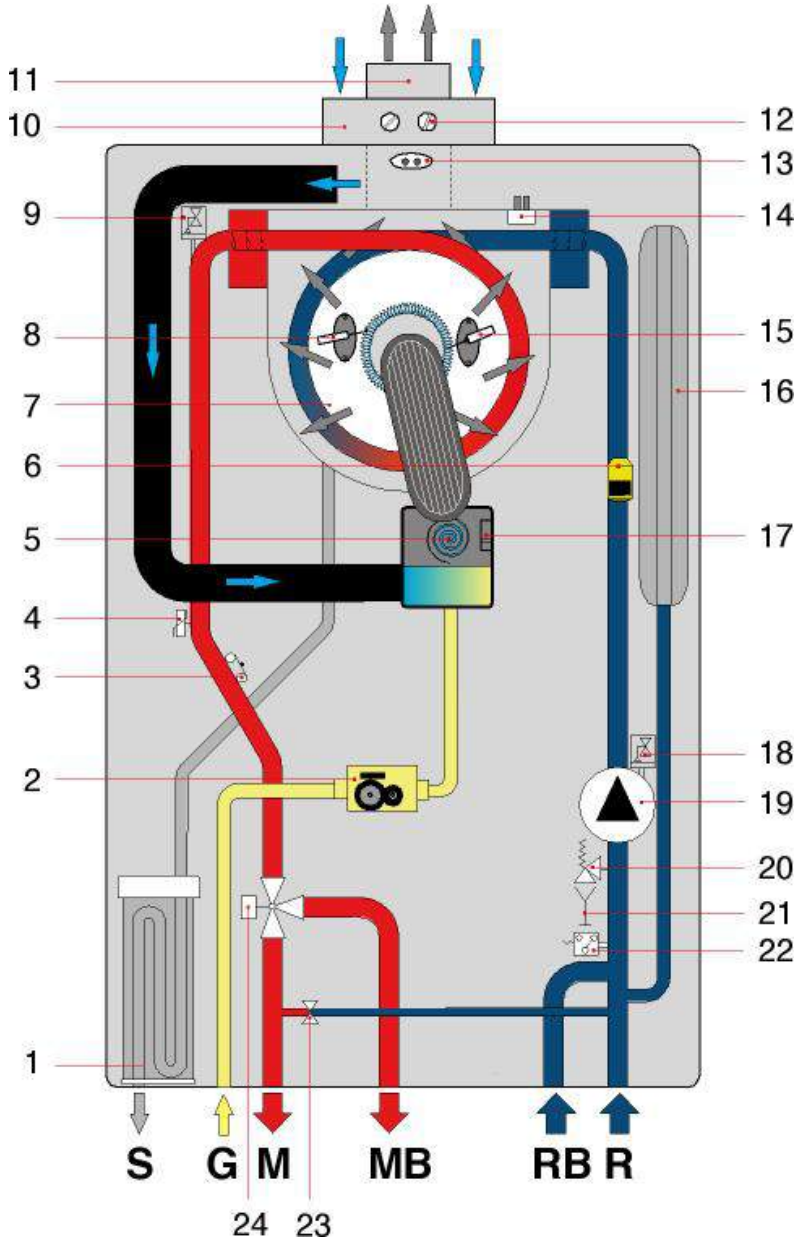

1. Condensate drain trap
2. Modulating gas valve
3. Heating temperature sensor 1
4. Heating temperature sensor 2
5. Modulating fan
6. Return temperature sensor
7. Primary condensing exchanger
9. De-aerator
10. Combustion air intake system
11. Flue gas vent system
12. Flue gas sampling points
13. Flue gas thermostat on vent duct
14. Flue gas probe on heat exchanger
15. Ignition/detection electrode
16. Expansion vessel
17. Fan control sensor
18. De-aerator
19. Circulating pump
20. 3-bar safety valve
21. Discharge tap
22. Low pressure switch
23. Automatic bypass
24. Motorised 3-way valve

S Condensate drain
G Gas inlet
M Heating system flow
MB DHW tank heater flow
RB DHW tank heater return
R Heating system return

3.2 HYDRAULIC UNIT

MOTORISED THREE-WAY VALVE

The boiler uses a three-way valve to divert the water flow into another pipe. Its function consists in diverting the primary circuit water into the secondary exchanger where heat will be transferred to the DHW.
It consists of one main brass valve body, one plastic cartridge, and one electric motor (actuator) to move the internal shutter.

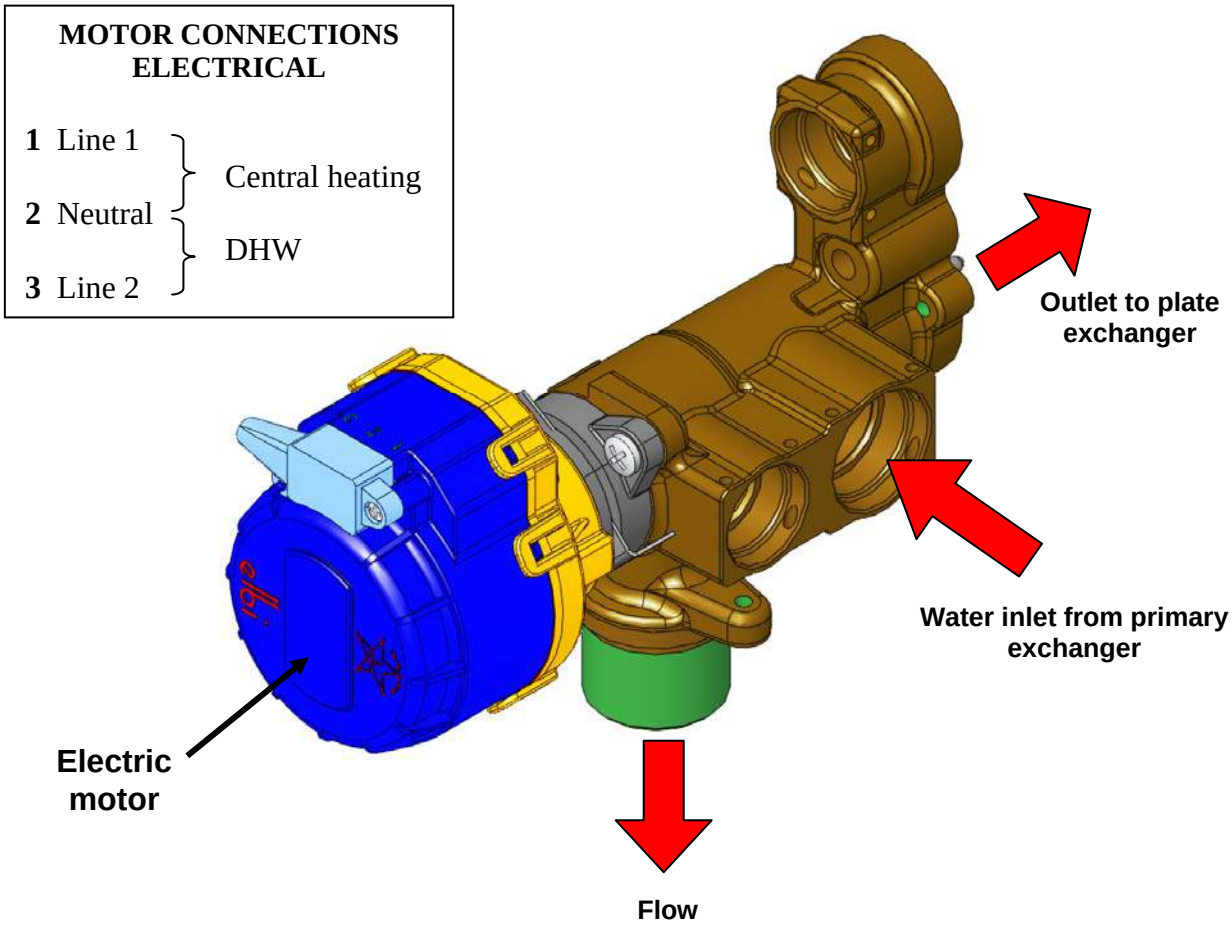

The secondary exchanger is fixed by the three-way valve and another group of thermopolymers connecting the cold water inlet pipe to the rest of the hydraulic system.
<u>The stainless steel plate exchanger consists of 12 plates for the 24 kW model and 14 plates for the 28 kW version.</u>

When hot domestic water is required, the cold water coming from the hot domestic water system passes through the flow switch setting the boiler to "DHW" mode. Then the three-way valve diverts the hot water coming from the primary exchanger into the secondary one to transfer its heat to the hot domestic water.

Note: In rest condition the three-way valve is in DHW mode position.

Three-way valve section:

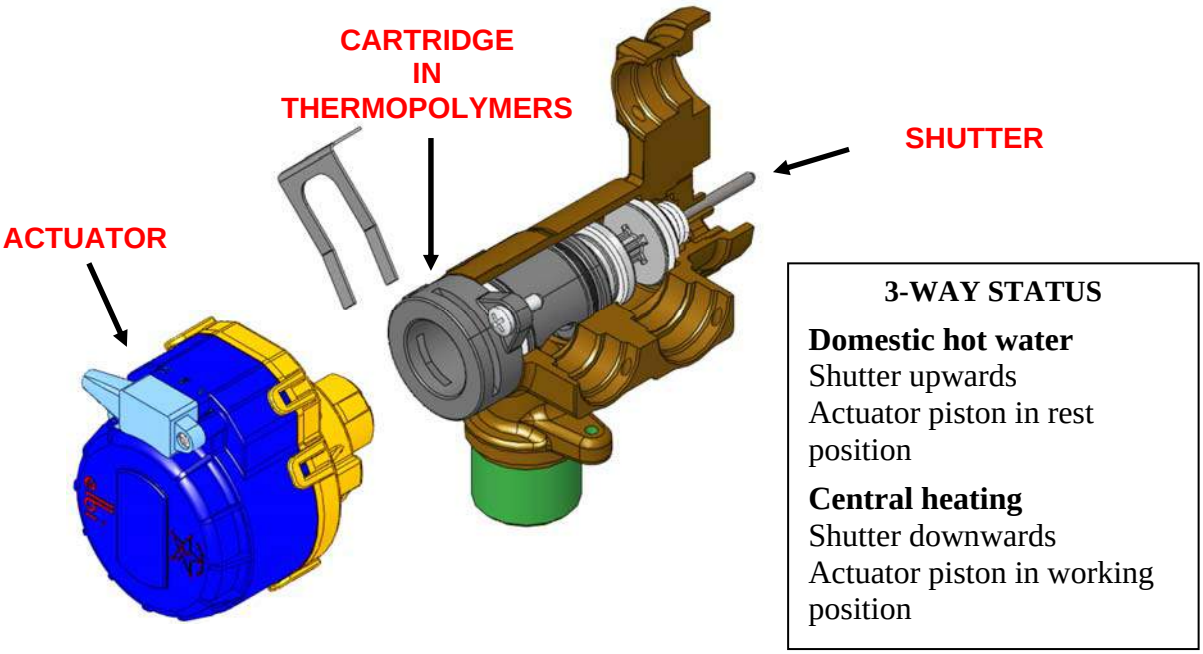

The boiler is provided with an automatic by-pass with non-return valve whose *opening threshold is of 400 mbar* . In case of load losses in the system due to thermostatic valve triggering, the by-pass ensures a minimum flow inside the primary exchanger.
It protects the primary condensing exchanger from overtemperatures due to the lack or a poor water flow.

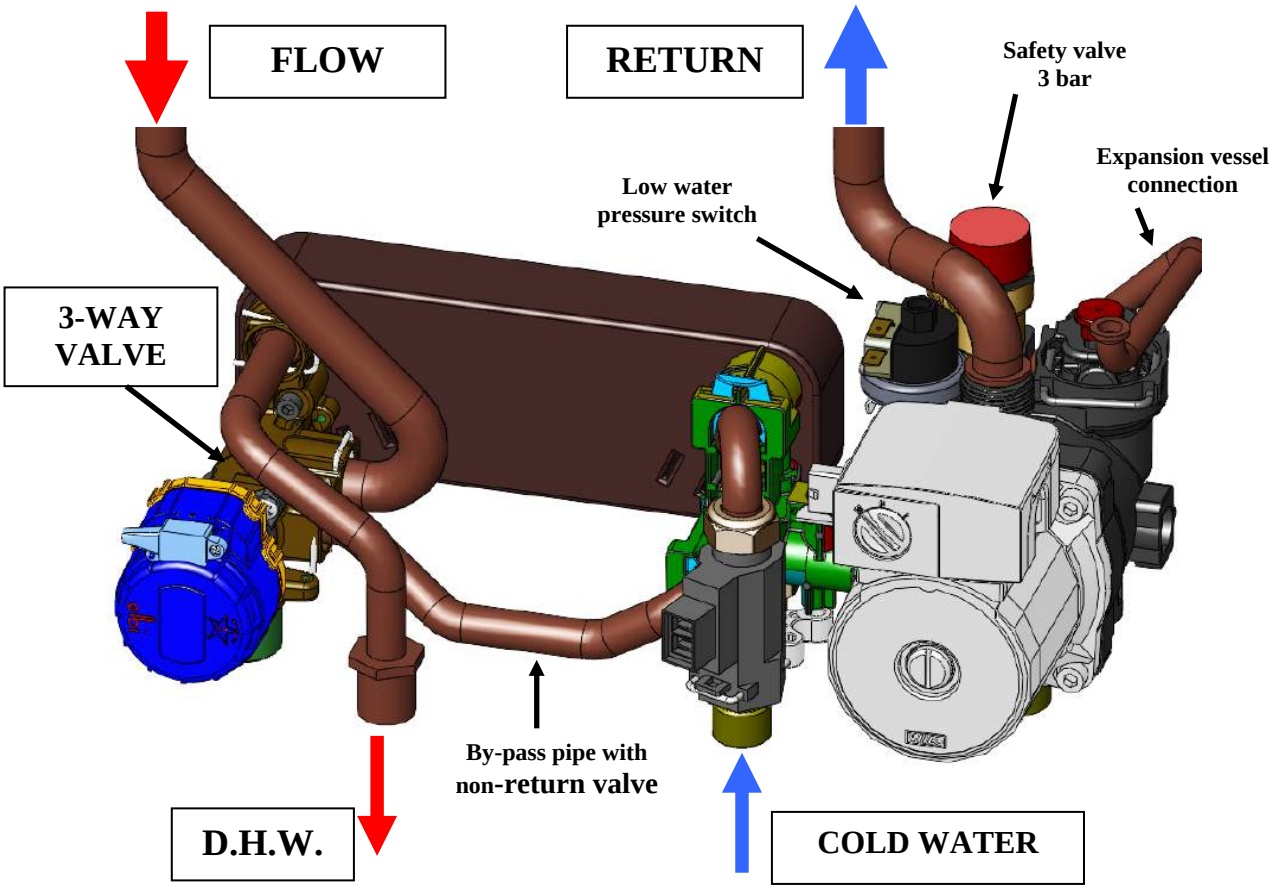

The circulation pump end block features one 3-position selector to set the motor rotation speed and thus the head to the system.
The circulating pump is the same for both power rates, what changes (according to the primary exchanger) is the residual head curve:

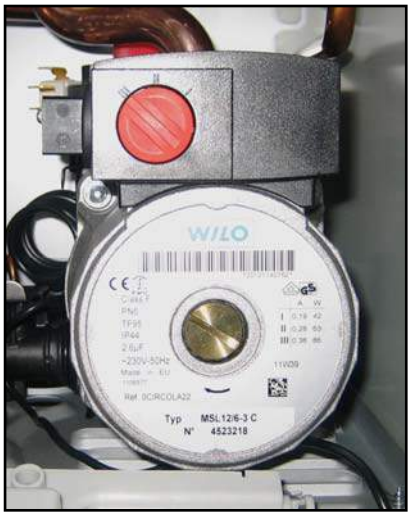

12 kW

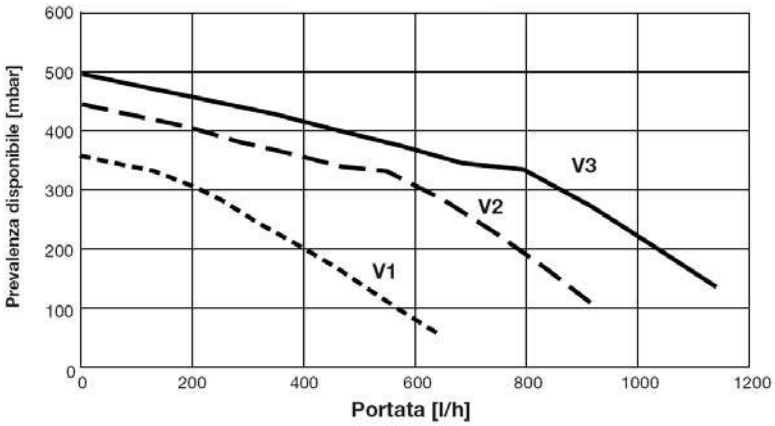

24 kW

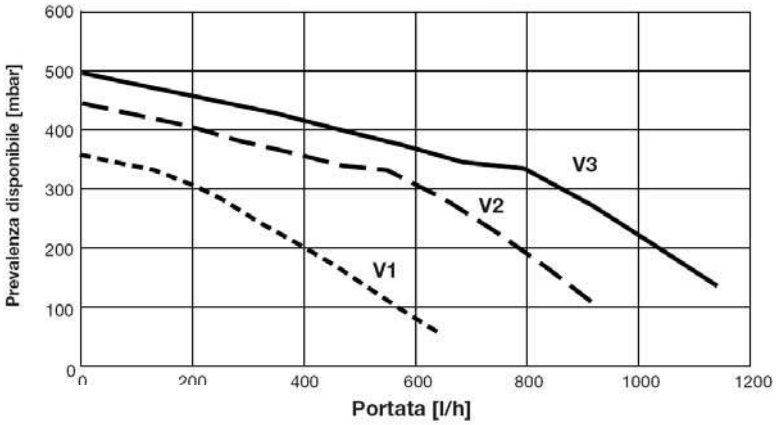

28 kW

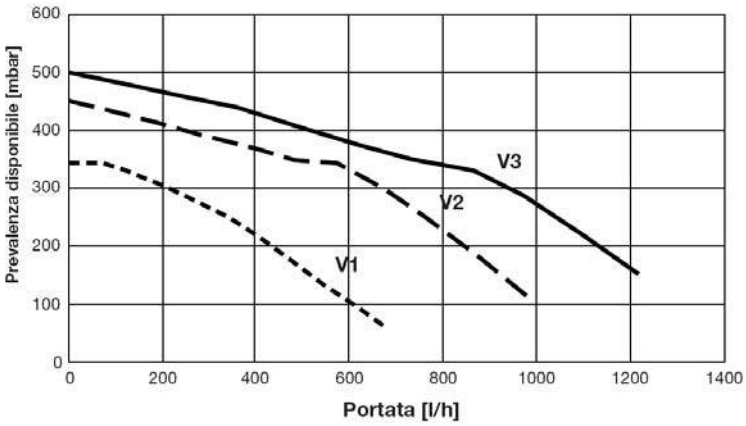

KEY

V1 Pump speed I (min)
V2 Pump speed II
V3 Pump speed III (max)

Max. head: 6 m
Max. operating pressure: 6 bar
Max. circulation temperature: 95°C

DHW FLOW SWITCH

The domestic hot water flow switch features a magnet switch whose position determines the minimum quantity of hot domestic water necessary to start the boiler (3 l/min ON and 1 l/min OFF). If the request of DHW does not exceed such value the micro-switch does not close the contact and inhibits the boiler starting to avoid the boiling risk. According to the different power rates the main difference between one flow switch and the other is the flow limiting device (flow regulator) that determines the litres/minute that can be drawn at Δt 30K:

Flow regulator:

- flow regulator 13 l/min (mod. 24kW)
part no.: 0REGOFLU04

- flow regulator 14 l/min (mod. 28kW)
part no.: 0REGOFLU07

PROTECTION FILTERS

To prevent dirt from building up in the primary exchanger and consequent damages we recommend cleaning thoroughly the system before its commissioning.
Safeguarding the primary exchanger body is fundamental to ensure an efficient operation of the boiler.
An excessive dirt build-up leads to load losses inside the heating circuit and a consequent flow rate decrease. A flow rate lower than that required by the heating flow switch leads to a boiler shutdown due to a "heating water circulation shutdown"".
For this reason it is **compulsory** to install a filter which can be inspected (Y-shaped type) with Ø 0.4 mm-mesh, on the return pipe before the boiler.

EXPANSION VESSEL

An increase of the heating water inside a closed circuit corresponds to an increase of the water volume. As no further space is available, it will not be water volume - but pressure - to increase. If pressure value exceeds safety valve triggering point, this latter will open and discharge water from system. This problem is prevented thanks to an expansion vessel positioned inside circuit; vessel houses an air diaphragm to be used to balance this overpressure.

- Nominal flow rate: 9 litres
- Preload: 1 bar
- Maximum operating pressure: 3 bar;
- Maximum operating temperature: 90°C.

3.3 PRIMARY CONDENSING EXCHANGER

The exchanger consists of stainless steel spiral pipes with oval section which are coiled during the working phase.
No welding is present in the exchanger hot zones (in contact with the flame); the exchanger features a weak heat inertia and a high resistance against corrosion.
The outer coating is made of thermo-polymer plastic materials.

Each component of the heat exchanger features 4 turns which, according to the boiler heat output, are divided as follows:

- “4+1” elements for the 28 kW model
- “3+1” elements for the 24 kW model

All elements are introduced and kept in a stainless steel case where a diaphragm placed between the elements separates the combustion zone (or “*flame side*”) from the condensing one (or “*flue gas side*”):

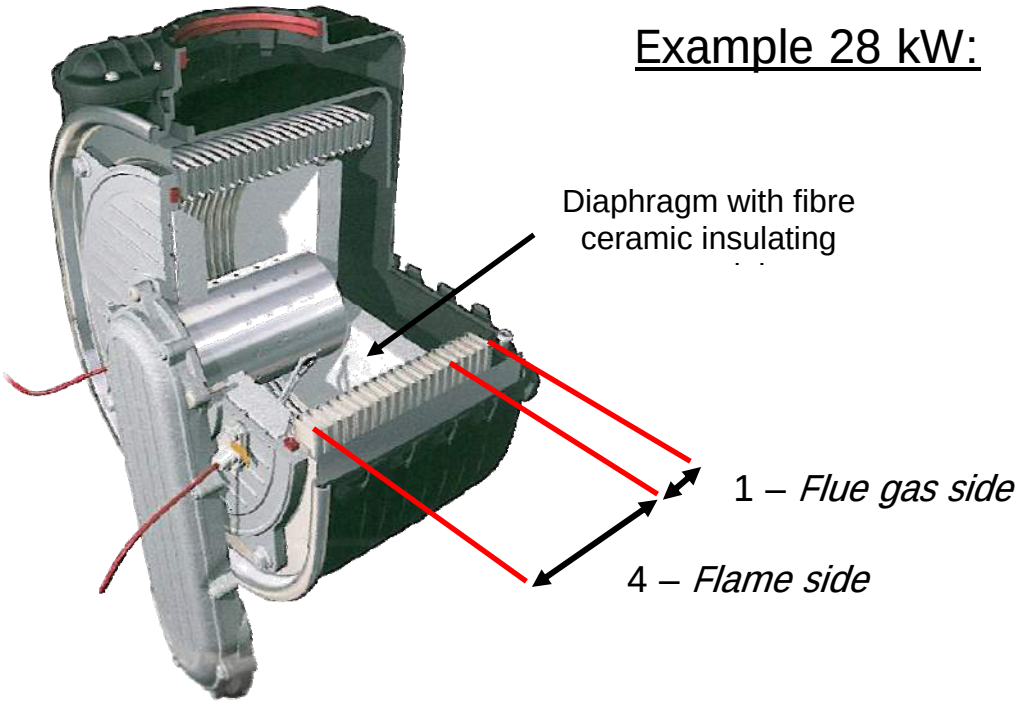

The heat exchanger has two stages. The first stage (combustion zone I) consists of 3 or 4 elements according to the output. The second colder stage (condensing zone II) consists of one element only and is heated by the hot flue gases produced in the combustion zone just before their discharge. In this stage the flue gas temperature falls below the "dew point" ensuring in this way the condensing.
Besides the deflector placed between the combustion and the condensing zone, a ceramic-fibre insulating material separates the two chambers and diverts the flue gases into the pipe interspace to facilitate the heat exchange.

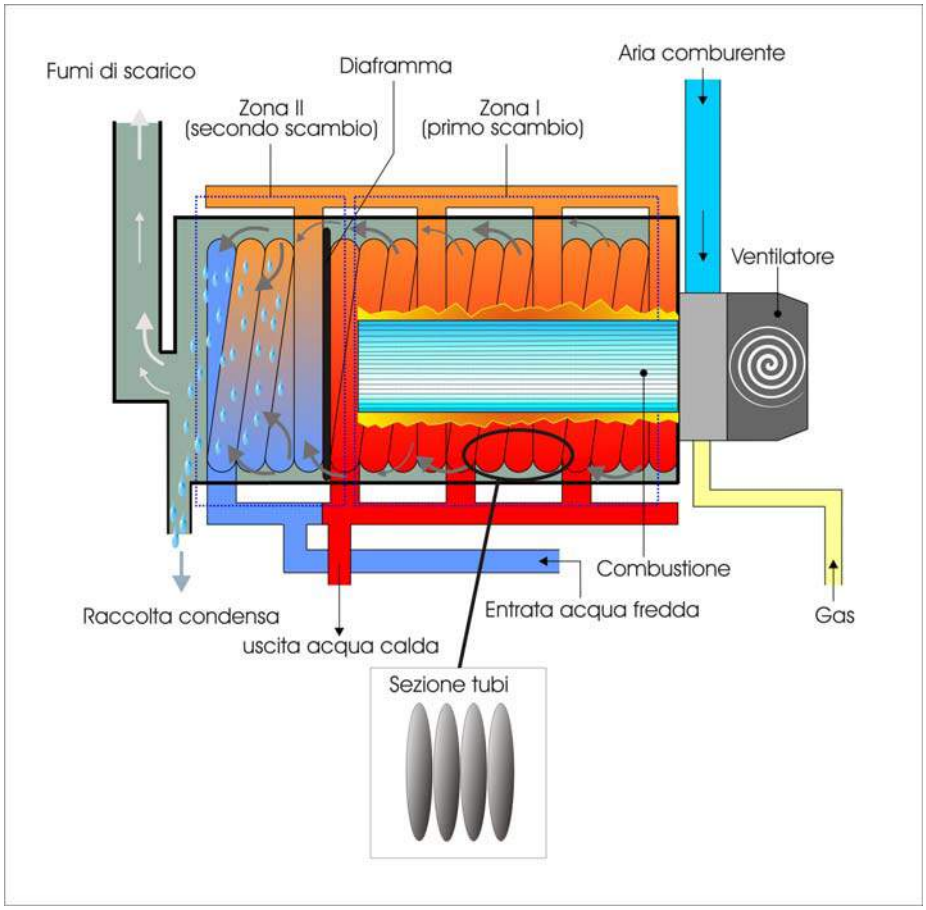

Inside the module, the system return pipe is placed in the coldest zone (condensing chamber) to ensure flue gas condensing and water pre-heating so that the water temperature is higher when flowing into the combustion chamber. This decreases the fuel consumption and avoid condensate formation that would drop onto and damage the burner.

After passing through the elements in the combustion chamber, the flue gases pass through the condensing chamber where a part of them start condensing, provided the return temperature allows it, whereas the combustion residues flow out of the hood.

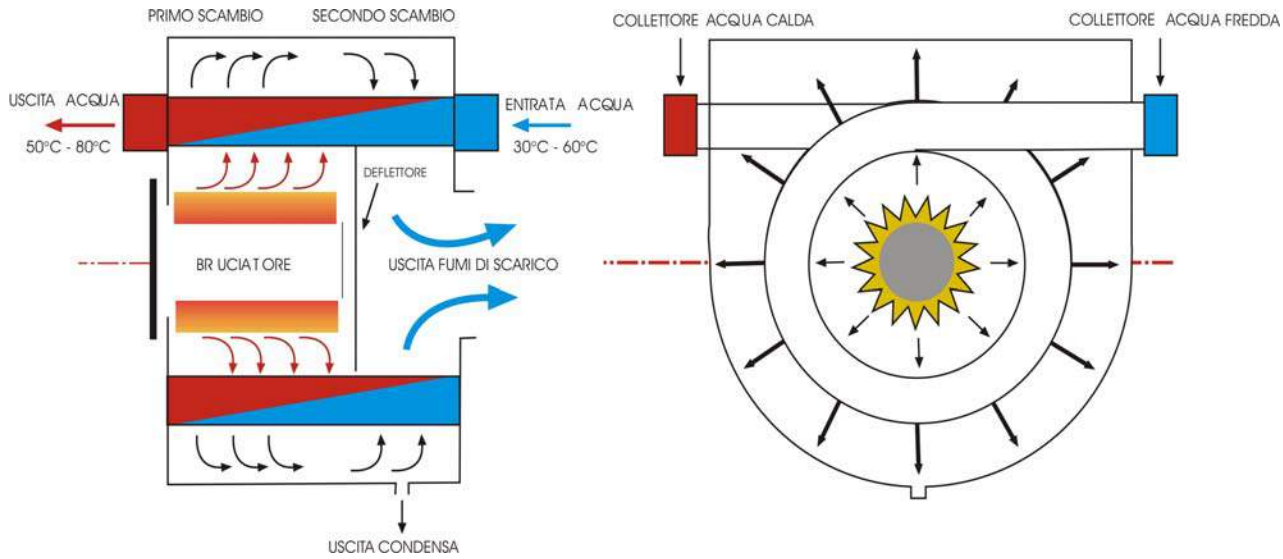

3.4 PRE-MIXED BURNER

The stainless steel burner with cylindrical shape is fixed to the exchanger by means of an aluminium flange. Inside the flange there is a silicone seal (**to be replaced every two years upon maintenance**) and a flue gas and condensate sealing rope, whereas a ceramic fibre insulating material prevents it from overheating.
The burner outer case features small round and oval holes to avoid a backfire. The internal side ensures an even distribution of the air-gas mixture on the whole burner surface.
On the aluminium flange is an electrode for flame ignition and detection.

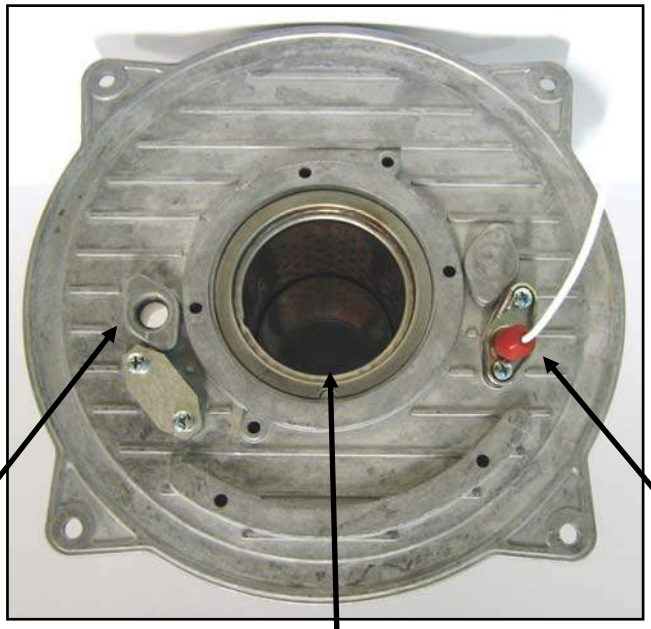

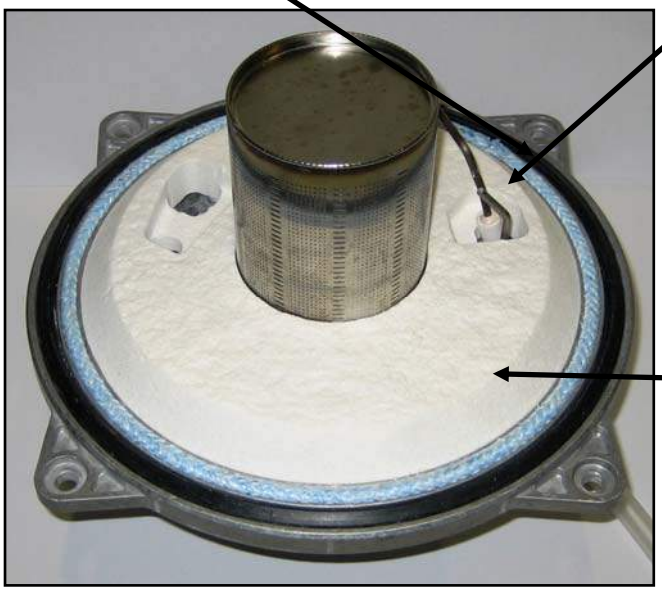

3.5 GAS VALVE AND FAN UNIT

When the fan is powered ***it generates a vacuum*** along the **fan-gas valve** connection pipe according to the air flow passing through it.
When the gas valve is powered, on the outlet there will be a negative pressure, and the valve will ***regulate the gas flow rate*** according to such vacuum and the fan speed.
This ensures a constant stoichiometric ratio during the boiler operation range.

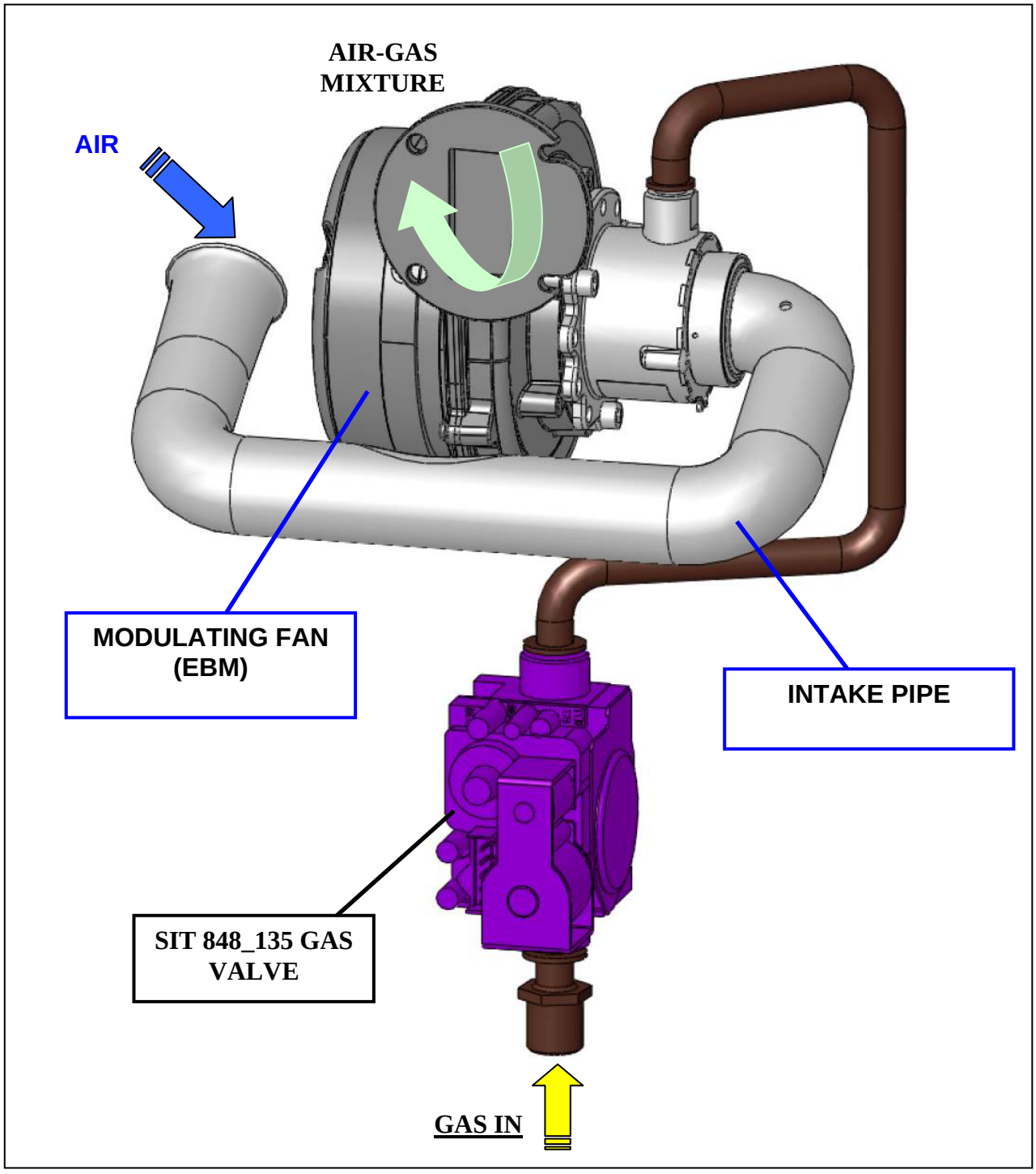

MODULATING FAN

The fan ensures a constant air flow during the modulation range from the maximum to the minimum heat capacity.
The fan speed changes according to the modulation power provided by the board as well as the type of boiler specified in the chart below.
This speed variation is due to the heat request and the temperature detected by the DHW and heating NTC probes.
Once the ignition power values and the maximum and minimum power have been set, the modulation range between the minimum and maximum values.

FAN SETTINGS						
PARAMETERS	**12 kW natural gas**	**12 kW propane**	**24 kW natural gas**	**24 kW propane**	**28 kW natural gas**	**28 kW propane**
P0 **Model type**	0	5	1	3	2	4
P4 ***Fan speed at maximum output*** *(DHW)*	187 *Hz*	181 *Hz*	199 *Hz*	192 *Hz*	201 *Hz*	198 *Hz*
P5 ***Fan speed at minimum output*** *(DHW and heating)*	39 *Hz*	39 *Hz*	42 *Hz*	42 *Hz*	40 *Hz*	40 *Hz*
P6 ***Fan speed at ignition output***	48 *Hz*	48 *Hz*	58 *Hz*	58 *Hz*	60 *Hz*	60 *Hz*
P7 ***Heating maximum power upper limit***	75 %	75 %	88 %	88 %	88 %	88 %
P8 ***Start of negative ramp descent***	56 *Hz*	56 *Hz*	56 *Hz*	56 *Hz*	60 *Hz*	60 *Hz*
P9 ***Negative ramp duration*** *(sec x 10)*	18	18	18	18	25	25

The fan is powered with 230 Vac; to change its speed the board sends another voltage signal (PWM). A HALL sensor integrated in the fan checks the consistency between the speed required by the board and the actual one.
The Hall sensor is a magnetostrictive sensor that sends a PWM signal back; the electronic board constantly checks the consistency between the signal sent by the fan and that of the Hall sensor, and if they do not match the boiler stops generating an error code linked with the fan fault (E40).

SIT 848_135 GAS VALVE

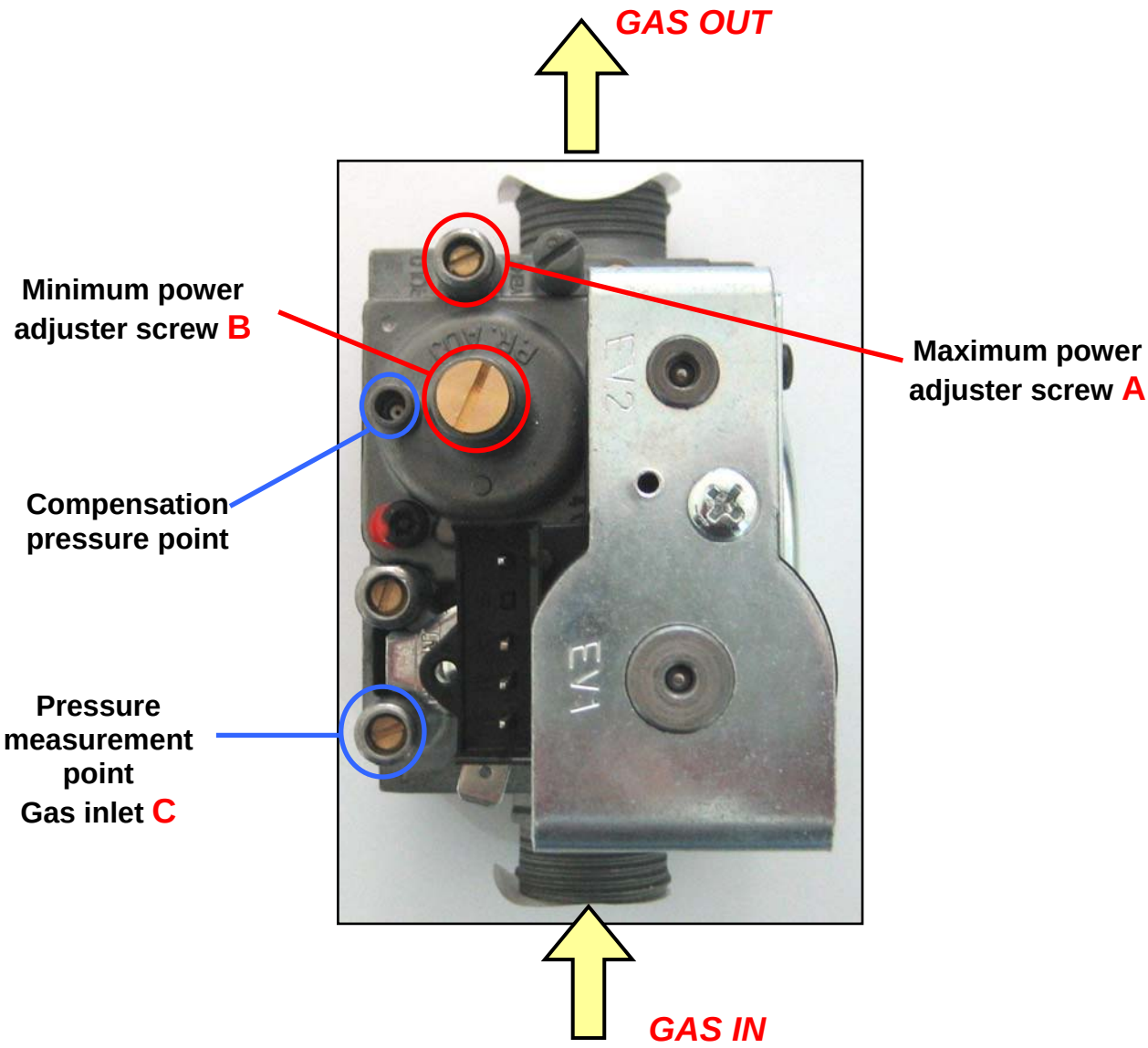

Gas valve features

	SIT 848_135
SV1 and SV2 safety coil operating power supply	230 VAC 50 Hz
SV1 operating current	40 mA
SV2 operating current	12 mA
SV1 supply pin	3 – 4
SV2 supply pin	3 – 1
Max. working pressure	60 mbar
Working temperature	-10 / 60°C
Coils	
Safety coil interchangeability	Yes
SV1 resistance value	1600 Ω
SV2 resistance value	6.70 KΩ

The valve features a compensation pressure point connected to the combustion chamber through a silicone pipe.
Valve thus knows the pressure on nozzles and can supply the correct quantity of gas even in case of overpressure or vacuum inside the chamber.
Upon ignition, for example, when fan is activated a vacuum develops inside the combustion chamber, and valve (thanks to this pressure point) decreases nozzle pressure so as to balance any exceeding gas supply due to vacuum.

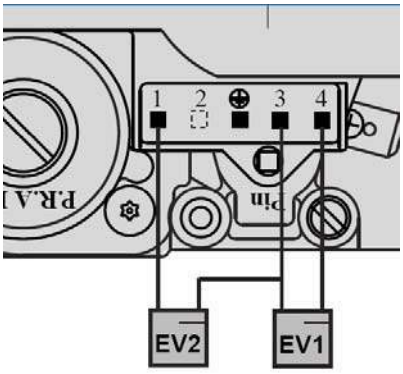

*SOLENOID VALVES **SV1** and **SV2***
ELECTRICAL CONNECTIONS

Resistivity values

Ev1 ≈ 1600 Ω
Ev2 ≈ 6.70 kΩ

At the valve outlet there are two gas regulating nozzles inside the mixer, to be replaced in case of gas conversion (see following paragraph).
The following table indicates the diameters of said nozzles according to the different power rates and types of fuel:

Nozzle diameter [mm]		
Thermal output	**Natural gas**	**LPG**
12 kW	**3.05**	**2.5**
24 kW	**3.7**	**3.0**
28 kW	**4.0**	**3.3**

Mixer exploded view for nozzle position:

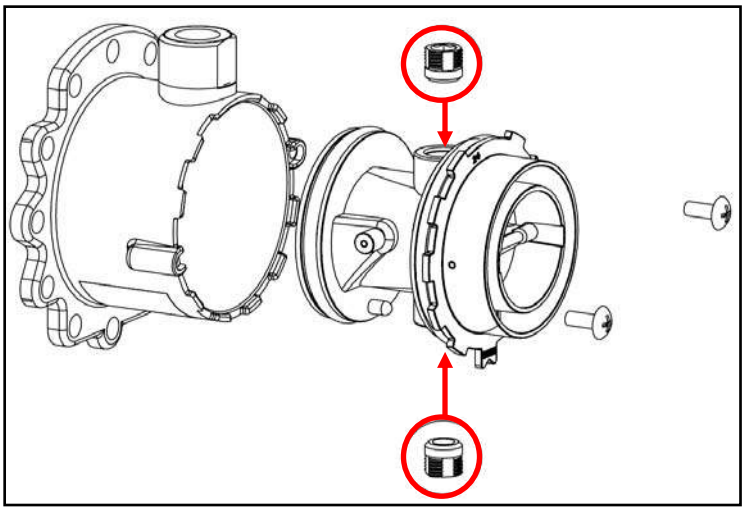

AIR/GAS MIXING UNIT

The air/gas mixture is generated thanks to the air flow through the vacuum developed by the fan and sent to the gas valve mechanism.
When the fan is powered it creates a vacuum proportional to its speed ensuring a mixture with constant ratio from the maximum to the minimum power. The fan impeller, besides sucking the combustion air, mixes the air and gas quantity before conveying them to the burner through the suitable pipe.

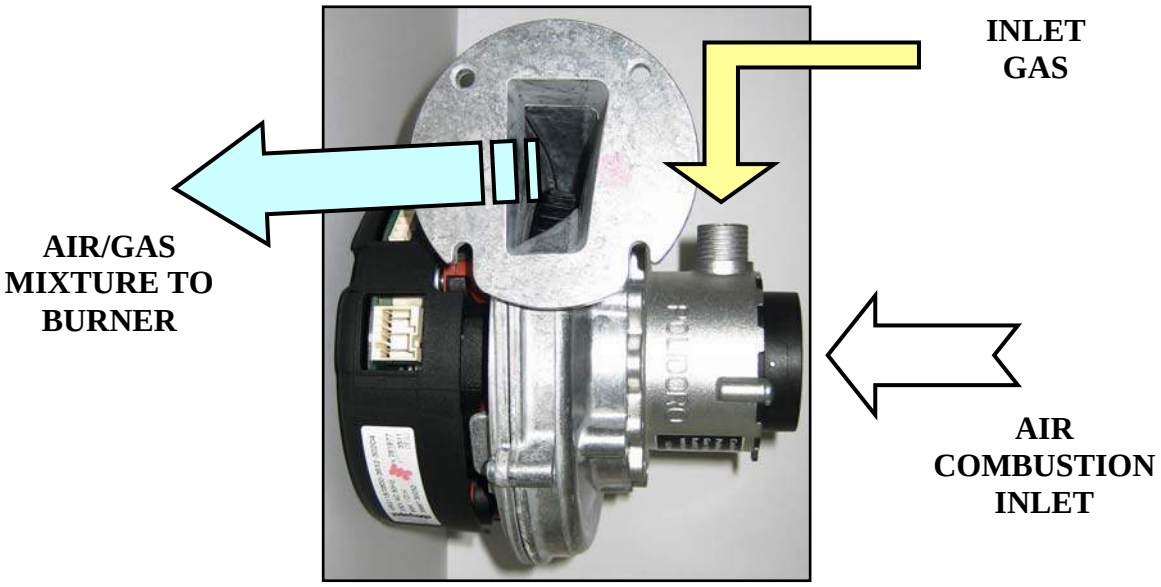

The mixer is connected to the fan intake opening and features a mechanism able to increase or decrease the air and gas flow rate according to the required power ensuring a very low minimum modulation of the boiler. <u>In particular, inside the mixture, there is a double deflector that at the minimum power closes (by gravity) the gas outlet of one nozzle and half passage of combustion air. Upon fan power increase, such deflectors are opened by vacuum allowing the passage of both air and gas</u>:

Open deflectors

Closed deflectors

3.6 FLUE GAS VENTING AND CONDENSATE DRAIN SYSTEM

The boiler is equipped with a tower for intake/discharge duct connection; the tower features openings directly accessing air and flue gas ducts (Openings for combustion efficiency measurement).
To take the measurements it is necessary to remove the metallic protective plate (A) and insert the analyser flue gas probe in the right hand opening.

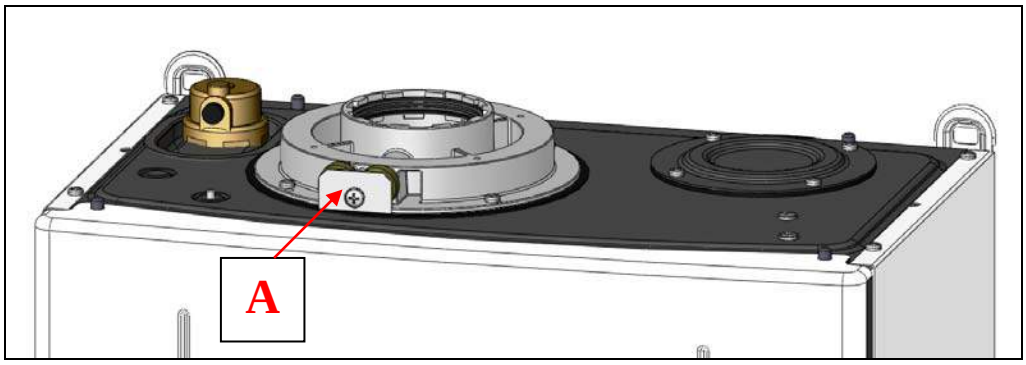

To determine the combustion efficiency refer to the following section concerning the gas valve setting.

CONDENSATE TRAP

This element collects and conveys the condensate produced by the primary exchanger into the sewer; its shape prevents the flue gas produced by the combustion from directly entering in contact with the discharge system.
The transparency of the material it is made of allows to immediately check its internal status. During the maintenance operations the trap can be easily emptied by means of a cap outside the boiler.
The vent system and connection must be made with suitable materials (stainless or plastic) resistant to heat shocks and chemical stress).
Warning: remember to connect the corrugated pipe supplied with the boiler to the condensate trap.

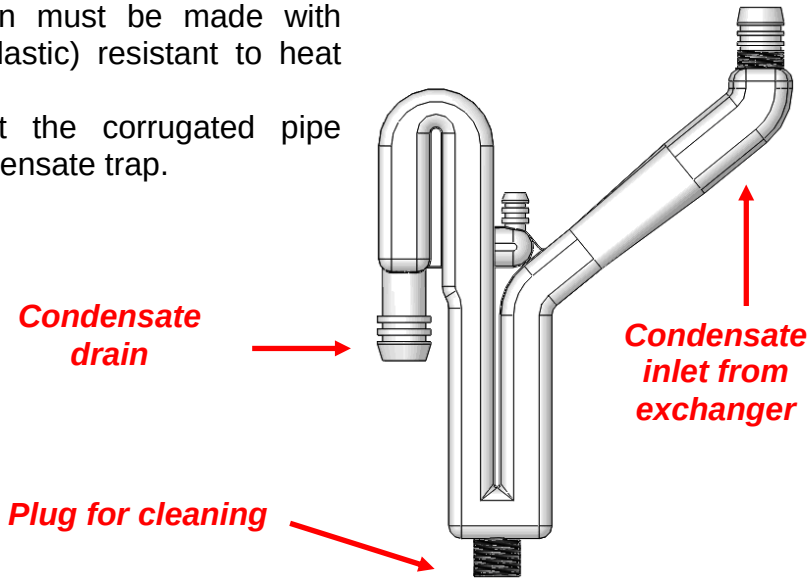

Note: the trap is not provided with float.
Upon ignition we recommend filling the trap with the water from the flue gas from the chimney.

SECT. 4

GAS SETTING AND TSP PARAMETERS

4.1 GAS VALVE SETTING

To set the gas valve, proceed as follows:

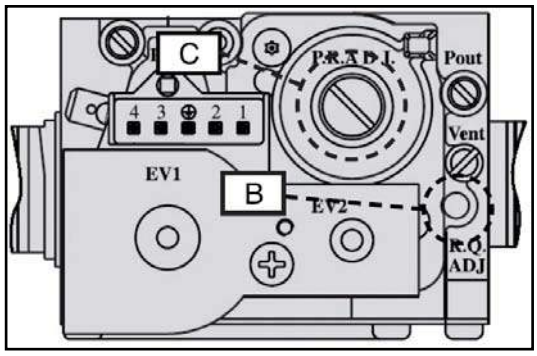

- **check mains *static* pressure** by means of the inlet pressure management point referring to the "setting" table on page 8 (pressure values lower than the required ones do no ensure a proper operation of the boiler);
- switch the heating system on with the ambient thermostat;
- remove the protection cap on the minimum output adjuster screw **C**;
- ignite boiler in the "***flue cleaning***" mode (see following paragraph);
- insert the analyser flue gas probe into the suitable flue pressure measurement point on the discharge tower;
- turn the maximum output screw **B** clockwise or counter-clockwise to accordingly increase or decrease the **CO_2** percentage referring to the combustion table at the end of this page;
- gradually press the "- *DHW*" key to operate the boiler at the maximum output (until the display shows the exact number of fan Hz at the minimum speed: 39 Hz (12 kW), 42 Hz (24 kW), 40 Hz (28 kW));
- turn the minimum output screw **C** clockwise or counter-clockwise to accordingly increase or decrease the **CO_2** percentage referring to the combustion table;
- press the "+ *DHW*" key to return to the maximum output (check that the display shows the correct number of fan Hz at the maximum speed: 187 Hz (12kW natural gas), 185 Hz (12 kW LPG), 199 Hz (24 kW natural gas), 192 Hz (24 kW LPG), 201 Hz (28 kW natural gas) and 198 Hz (28 kW LPG));
- check the **CO_2** percentage again and adjust it by means of screw **B** if necessary;
- quit the "flue cleaning" function by pressing the "**reset**" key;
- disconnect the analyser flue gas probe and refit the protection caps (gas valve and discharge tower);
- switch the heating system off with the ambient thermostat.

CO_2 values (± 0.1%)	**12 kW**		**24 kW**		**28 kW**	
	min	max	min	max	min	max
Natural gas	**9.3**	**9.0**	**9.3**	**9.0**	**9.3**	**9.0**
Propane gas	**10.3**	**10.0**	**10.0**	**10.0**	**10.3**	**10.0**
Content of CO in the flue gas <1000 ppm						

4.2 CHIMNEY SWEEP FUNCTION

The boiler features a flue cleaning function which must be used to measure combustion efficiency during operation and to set the burner.
This function can be enabled only in the HEATING + DOMESTIC HOT WATER operating mode. To enable it, press keys "***info*" and "*reset***" at the same time, and keep them pressed for three seconds. Now the boiler performs the ignition sequence and then operates at the burner **maximum** output fixed by the parameter **P4**.
The display shows the fan current rpm (number of revolutions per minute), the flow temperature, the lit flame symbol with burner on, and the "broom" symbol to indicate that the flue cleaning function is active.

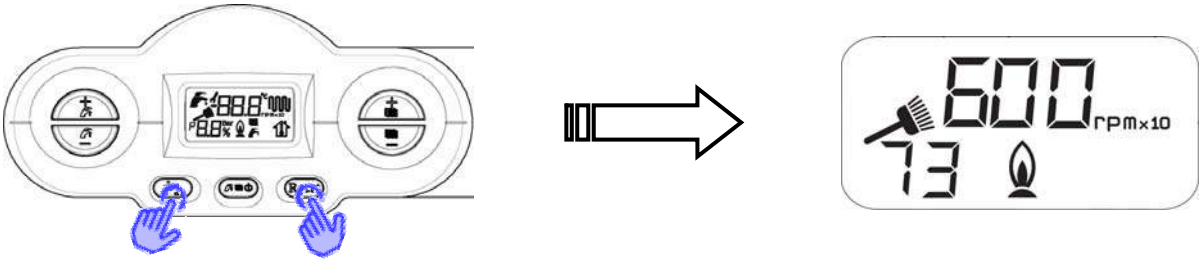

By pressing the DHW "+" or "-" keys it is possible to change the fan speed from P5 (minimum speed) to P4 (maximum speed). In this case the display shows the wrench symbol (parameter editing indicator) as well as the Hertz (H) number corresponding to the fan speed.

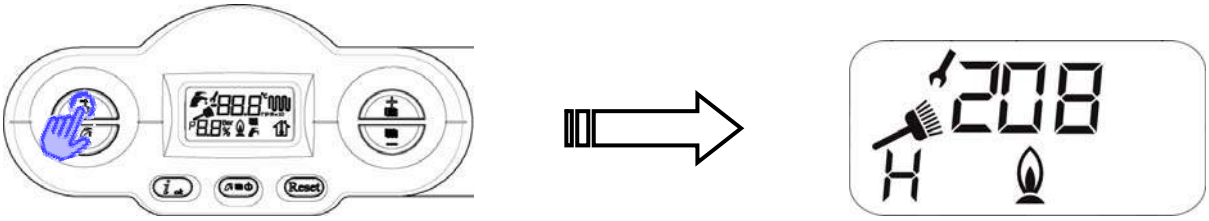

This operation is useful when setting the combustion to the minimum output **by gradually pressing the DHW "-" key** to pass to the fan minimum values. Following are the minimum power values:

12 kW	24 kW	28 kW
39 Hz	42 Hz	40 Hz

Release the DHW "+" or "-" keys to go back to the previous screen showing the fan rpm and the flow temperature.

The burner is switched off when the temperature detected by the flow probe exceeds 90°C and switched on again when reaching 70°C.
During such function the pump is powered, the three-way valve switches to the heating position, and the multifunction relay is excited by parameter P17=1 (remote relay) or P17=3 (heating relay).
The function stops automatically after 15 minutes, or by pressing the "reset" key, or setting a mode different from the "heating+DHW" one.

4.3 GAS CONVERSION

Our boilers are manufactured to run on the type of gas (natural gas or propane) specified on the purchase order. Subsequent conversion requires the intervention of a qualified service engineer.

Gas conversion procedure.

- First disconnect the boiler from the power supply, and the turn off the main gas cock.
- Remove the front panel of combustion chamber.
- Remove the intake pipe.
- Disconnect the gas pipe from the mixer.
- Unscrew the three socket head screws and remove the mixer.
- Take the mixer apart (see diagram).
- Remove the two burner nozzles using a 6mm Allen wrench.
- Mount the new nozzles and **screw them in but do not overtighten.**

  IMPORTANT. If the nozzle jiggles in the its seat, it means the thread is damaged, so the whole mixer needs to be replaced to guarantee a perfect seal.

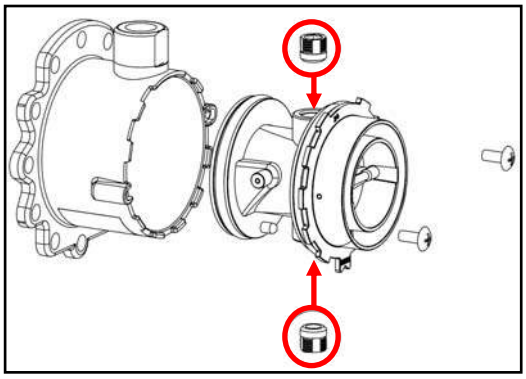

- Refit all components, taking care not to damage the seals.
- Power on the boiler and open the gas cock.
- Call up the parameter setting page, and enter as the P0 parameter the value corresponding to the power rating and type of gas used (refer to the illustrated sequence under *Changing the TECHNICAL parameters* on page 41).
- Check parameters P4, P5, P6 and P7 (refer to the table on page 43) referring to the gas used, and change them if necessary, following the same procedure.
- Now you can adjust the gas valve (see 4.1 on page 37).

Output	Diameter [mm]	
	Natural gas	LPG
12 kW	3.05	2.5
24 kW	3.7	3.0
28 kW	4.0	3.3

4.4 PARAMETERS

The boards house a memory with a series of parameters (called P parameters) to be accessed for displaying purposes only, or to be edited for boiler perfect setting based on the system used. These parameters can be directly accessed from user's interface, or through the remote control.

Displaying parameter

Press the "*info*" key several times to scroll in sequence the values of the parameters for displaying purposes only (see paragraph "Parameter list") such as the external, flow, DHW temperature, etc.:

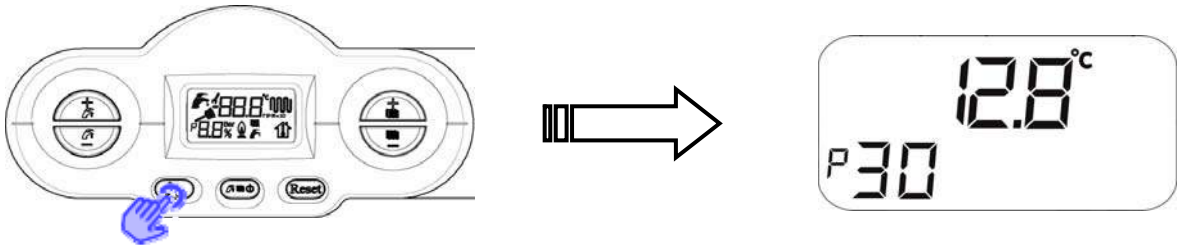

To quit the displaying function, simply press "*reset*". Display will anyway go back to the starting screen 30 seconds after key has been pressed.

Changing the parameters

If keys "*reset*" and "- *heating*" are pressed together for three seconds, you will access the parameter setting mode.
Use the "+/- *heating*" keys to select the desired parameter (see paragraph "Parameter list"").

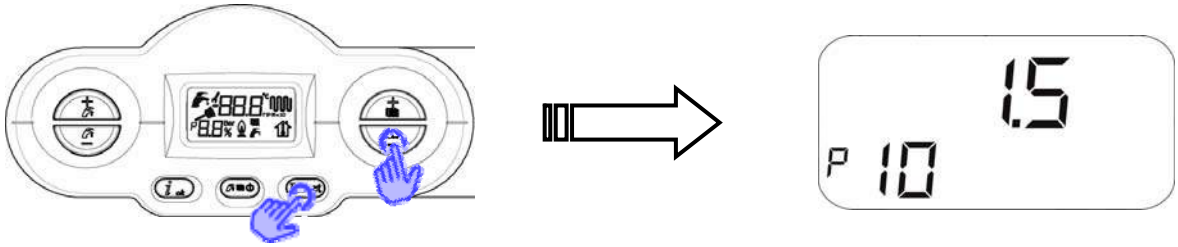

Press "*OK*" to confirm that parameter value has to be edited; the adjustable wrench symbol indicates that parameter value can be edited using keys "+/- *heating*".

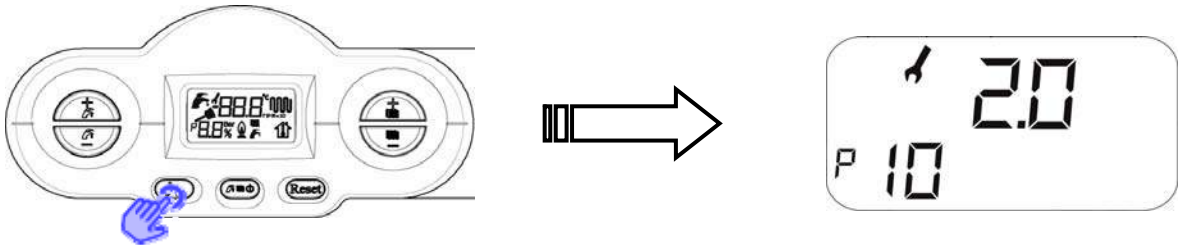

To confirm parameter value editing, press "*OK*".
Scroll the parameter list to edit other values, or press "*reset*" to quit the setting function.

Parameter list

Parameter	*Range*	*Default value*	*Notes*
P0 Boiler output selection	0-7	1	**0** = 12 kW natural gas **1** = 24 kW natural gas **2** = 28 kW natural gas **3** = 24 kW LPG **4** = 28 kW LPG **5** = 12 kW LPG
P1 Fan type selection	0-2	0	**0** = EBM **1** = FIME **2** = SHINANO
P2 Flow rate control selection	0-2	0	**0** = temperature probes **1** = flow switch **2** = H_2O pressure switch only
P3 Boiler type selection	1-3	1	**1** = combined instantaneous **2** = heating only **3** = with water heater
P4 Burner max. output fan speed	From P5 (min) to 250 Hz	199	**187** = 12 kW natural gas **199** = 24 kW natural gas **201** = 28 kW natural gas **192** = 24 kW LPG **198** = 28 kW LPG **185** = 12 kW LPG
P5 Burner min. output fan speed	25-20 Hz	42	**39** = 12 kW natural gas / LPG **42** = 24 kW natural gas / LPG **40** = 28 kW natural gas / LPG
P6 Fan speed at ignition power	25-60 Hz	58	**48** = 12 kW natural gas / LPG **58** = 24 kW natural gas / LPG **60** = 28 kW natural gas / LPG
P7 Max. heating output fan speed	10-00%	88	**75** = 12 kW natural gas **74** = 12 kW LPG **88** = 24 kW natural gas / LPG **87** = 28 kW natural gas / LPG
P8 Negative ramp start minimum speed	P5-P6	56	**56** = 12 kW natural gas / LPG **56** = 24 kW natural gas / LPG **60** = 28 kW natural gas / LPG
P9 Negative ramp time	0-300s (1=10s)	18 (180s)	**18** = 12 kW natural gas / LPG **18** = 24 kW natural gas / LPG **25** = 28 kW natural gas / LPG
P10 Heating curve	0-300 (1=100)	150	<u>With external probe:</u> *Low temperature from 0 to 0.8* *High temperature from 1 to 3* <u>Without external probe:</u> Value < 1-reduced range (low temperature)
P11 Heating thermostat timer	0-0 min	4	
P12 Heating output ascent ramp timer	0-0 min	1	
P13 CH post-circulation, anti-freeze and chimney-sweep timer	30-180 s	30	
P14 Solar DHW thermostat setting	0-1	0	**0** = standard **1** = solar
P15 Configurable anti-water hammer protection delay	0-10 s	0	

	P16 Ambient / OT thermostat reading delay	0-99 s	0	
	P17 Multifunction relay setting	0-3	0	**0** = shutdown and fault **1** = TA1 remote relay **2** = solar relay **3** = TA2 request
Solar parameters *(only with additional board)*	**P18** Select solar function	0-1	0	**not available in this version**
	P19 Tank heater set-point range	10-90°C	60°C	*with forced circulation solar system*
	P20 ΔT ON (solar pump ignition diff.)	1-30°C	6°C	
	P21 ΔT OFF (solar pump switch-off diff.)	1-30°C	3°C	
	P22 Maximum solar collector temperature	80-140°C	120°C	
	P23 Minimum solar panel temperature	0-95°C	25°C	
	P24 Solar collector anti-freeze	0-1	0	**0** = anti-freeze not active **1** = anti-freeze active
	P25 Forced solar load (via multifunction relay)	**not available in this version**		
	P26 Enable tank heater cooling	0-1	0	**0** = disabled **1** = enabled
	P27 Heating timer reset temperature	20-78°C	*P10<1 (low temperature) = 20°C* *P10≥1 (high temperature) = 40°C*	
	P28 Plumbing operation selection *(heating-only version)*	0-1	0	**0** = pump + diverting valve **1** = double pump
	P29 Default parameter setting except for P0-P1-P2-P17 and P28	0-1	0	**0** = OFF **1** = default parameters

Displaying only	**P30** External temperature displaying			It can be displayed with connected external probe only
	P31 Flow temp. displaying			
	P32 Calculated rated flow temp. displaying (with thermoreg. only)			It can be displayed with connected external probe only
	P33 Display of flow temperature set-point for zone 2			It can be displayed with a connected zone board only
	P34 Display of current flow temperature for zone 2			It can be displayed with a connected zone board only
	P36 Display of flow temperature set-point for zone 3			It can be displayed with two connected zone boards

	P37 Display of current flow temperature for zone 3			It can be displayed with two connected zone boards
	P39 Display of flow temperature set-point for zone 4			It can be displayed with three connected zone boards
	P40 Display of current flow temperature for zone 4			It can be displayed with three connected zone boards
	P42 Plate DHW temp. displaying			
	P43 Boiler return temp. displaying			
	P44 Boiler temp. displaying			It can be displayed for versions KR or KRB only
	P45 Flue gas temperature displaying			
	P46 Solar panel temperature display			Only visible with the solar collector probe connected
	P47 Display of tank heater or solar valve temperature from boiler			Only visible with the tank heater probe or solar valve connected
	P48 Display of tank heater or solar valve temperature from solar board			As above, but only visible with a additional board connected
	P50 Display of boiler type	X, Y, Z		X = P0 value Y = P2 value Z = future application
	P51 Boiler last shutdown displaying	Fault code		
	P52 Boiler second last shutdown displaying	Fault code		
	P53 Boiler third last shutdown displaying	Fault code		
	P54 Boiler fourth last shutdown displaying	Fault code		
	P55 Boiler fifth last shutdown displaying	Fault code		
	P56 No. of faults since last reset			
	P57 Board use month displaying	Counting based on the board micro-switch daily reset. 30 reset operations correspond to one month.		
P60 Number of supplementary connected boards		0 to 4	0	Max. three zone boards (one fore each zone)
P61 Ambient thermostats and remote association		00 to 02	00	00 = remote control zone2; Ta2 zone1; 01 = Ta 1 zone2; Ta2 zone1; 02 = remote control zone2; Ta2 zone1;
P62 Zone 2 curve selection		0 to 3	0.6	It can be set with a zone board connected. <u>Without external probe:</u> Value < 1, reduced range (low temperature)

	P63 Zone 2 set-point selection (fictitious temp.)	15 to 35°C	20°C	It can be set with one zone board connected. Without external probe: Fixed flow set-point
	P66 Zone 3 curve selection	0 to 3	0.6	It can be set with two connected zone boards Without external probe: Value < 1, reduced range (low temperature)
	P67 Zone 3 set-point selection (fictitious temp.)	15 to 35°C	20°C	It can be set with two connected zone boards Without external probe: Fixed flow set-point
	P70 Zone 4 curve selection	0 to 3	0.6	It can be set with three connected zone boards Without external probe: Value < 1, reduced range (low temperature)
	P71 Zone 4 set-point selection (fictitious temp.)	15 to 35°C	20°C	It can be set with three connected zone boards Without external probe: Fixed flow set-point
	P74 Mixing valve opening time	0 to 300 s	140 s	It can be set with a zone board connected.
	P76 Heat discharge via solar board	0-1	0	**0** = disabled **1** = enabled
System check	**P80** Multifunction relay forcing	0 to 1	0	0 = standard function 1 = excited relay
	P81 Zone 2 pump relay forcing	0 to 1	0	0 = standard function 1 = excited relay
	P82 Zone 2 mixing valve forcing	0 to 2	0	0 = standard function 1 = force in opening 2 = force in closure
	P84 Zone 3 pump relay forcing	0 to 1	0	0 = standard function 1 = excited relay
	P85 Zone 3 mixing valve forcing	0 to 2	0	0 = standard function 1 = force in opening 2 = force in closure
	P87 Zone 4 pump relay forcing	0 to 1	0	0 = standard function 1 = excited relay
	P88 Zone 4 mixing valve forcing	0 to 2	0	0 = standard function 1 = force in opening 2 = force in closure
	P91 Solar board relay override	0-1	0	**0** = standard function **1** = energised relay
	P92 Solar board valve relay override	0-2	0	**0** = standard function **1** = opening override **2** = closure override
	P95 Shutdown from P51 to P56 displaying reset	0 to 1	0	1 = shutdown reset

SECT. 5

OPERATING LOGIC

5.1 MAIN GENERAL CHARACTERISTICS

- Function priority;
- Boiler type setting;
- Ignition phase at pre-set power;
- Flame propagation phase at pre-set power;
- Automatic flame control;
- DHW priority;
- Plate DHW modulation;
- Ambient thermostat;
- Ambient thermostat timer (antifast);
- Boiler maximum power (settable);
- Temperature range pre-selection;
- CH modulation with power rising ramp
- Thermoregulation with external temperature probe;
- Open therm remote control pre-setting;
- Programmable multifunction relay;
- Preset for control unit for different zones;
- Temperature probe wholeness check;
- Brushless fan wholeness check;
- Flow freeze protection function;
- Plate DHW freeze protection function;
- Anti-shutdown function;
- Pump post-circulation function;
- Post-ventilation function;
- Safety devices and functions;

FUNCTION PRIORITY

The following table shows main function enabling priorities in case of simultaneous request of two or more functions.

Priority	Status
1	Shutdown status (the "pump only" freeze protection and "deviating valve and pump seizing" functions could anyway be executed)
2	Flue cleaning
3	DHW request
4	Heating request in "DHW + CH" mode
5	Heating freeze protection both in "DHW" and "DHW + CH" modes
6	Post-circulation
7	Deviating valve and pump anti-seizing
8	Waiting for a request

BOILER TYPE SETTING

This board is arranged to manage 3 different types of boiler according to the setting of parameter P3 (see paragraph on page 34):

P3 = 1 → combi instant plates
P3 = 2 → heating only (future implementation)
P3 = 3 → with water heater (future implementation)

IGNITION PHASE AT PRE-SET POWER

Upon every operation request entailing burner ignition, burner will be ignited with a pre-set power by means of parameter P6 (fan speed at burner ignition power). Once flame is detected, the following flame propagation phase will be started .

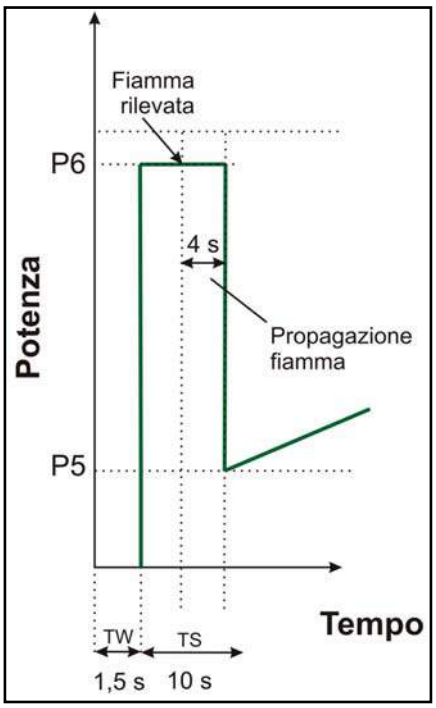

FLAME PROPAGATION PHASE AT PRE-SET POWER

During the flame propagation phase, for 4 sec, the power provided to the burner is kept at the ignition power value (P6) to allow the flame propagation. At the end of such propagation, the next step is the adjustment of the required functions (DHW, heating, anti-freeze or flue cleaning).

AUTOMATIC FLAME CONTROL

Upon an operation request (DHW or heating) fan will be powered; it will be considered active if a higher speed than the maximum rotation speed (700 rpm) is detected for **1.5 seconds** (***TW room pre-cleaning waiting time***). If the fan rpm number is within the tolerance (300 rpm), the igniter and the gas valve are powered. The igniter is excluded in case of flame presence or a second before the **TS safety time (10 sec)**.
If the flame does not appear during one ignition attempt at "cold" system (without detection) within the TS safety time, the automatic flame control automatically closes the gas valve and repeats the ignition sequence maximum 5 times with a 5-second room cleaning cycle after each attempt. In case no flame is detected during the last attempt within the TS safety time, the flame control switches to the **flame control lock** status. In case the flame disappears during the TS safety time, the ignition transformer is reactivated without interrupting the gas valve power supply, and with fan turning at the same ignition speed.

If the flame disappears after a standard operation (after the safety time), the automatic flame control repeats the ignition sequence and carries out only **one** ignition attempt after a 5-second room pre-cleaning.
The flame control switches to shutdown status even when a flame is detected with burner off (parasitic flames) for a time higher than TW+TS value.

In case of flame shutdown a post-circulation is carried out according to the operation request (30 sec. in DHW mode; P13 in heating mode with three-way valve in the relevant operation position) and a 10 second post-ventilation to clean the chamber at the ignition speed (P6) + 900 rpm.

To resume the shutdown condition it is necessary to wait 5 seconds and press the "*reset*" key, or use the remote control. In the latter case maximum three (3) consecutive reset attempts are allowed within 24 hours. Then it will be necessary to reset the alarms directly on the boiler.

Hereinafter is boiler operation logical diagram:

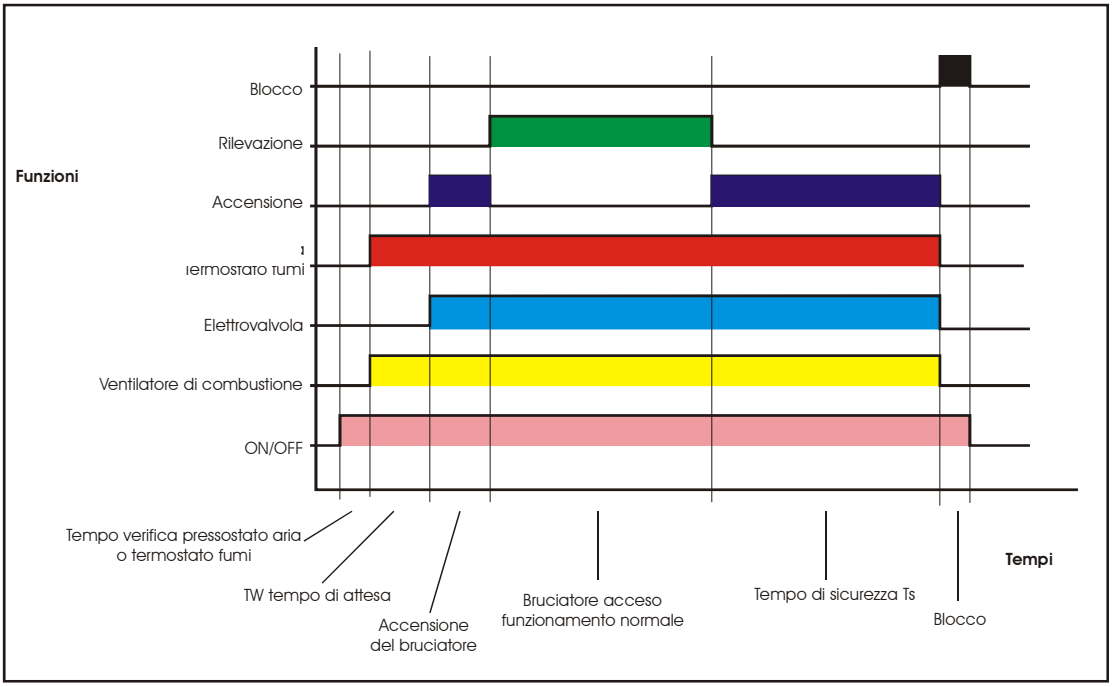

The flame control switches to **shutdown** status if the flue gas probe and thermostat do not give the consensus necessary for a correct operation (see page 56/57).

DHW PRIORITY

With boiler running in "DHW" or "DHW + CH" mode, DHW priority flow switch electric contact closing will originate a DHW operation request, thus starting DHW modulation.
The operation request in DHW mode has the priority on all other requests, and finishes when the previously mentioned electric contacts are open again.
WARNING: With parameter P15, it is possible to delay the flow switch reading for the DHW mode (from 0 to 3 seconds).

PLATE DHW MODULATIONv ***(version KC only, P3=1)***

Upon an operation request in plate DHW mode with boiler in “DHW” or “DHW+HEATING”, if the water temperature read by the DHW probe is lower than the set-point value + 3°C, a consensus is given to the automatic flame control section to start the burner ignition sequence.
At the end of such sequence the power provided to the burner corresponds to the ignition power (P6), and then the power to the burner corresponds to the flame modulation value.
The DHW temperature is constantly read, and the ramp is interrupted when reaching the flame modulation point with a PID type action, until reaching and maintaining the DHW temperature pre-selected on the boiler or through the remote control.

During the first 20 seconds when the DHW is being drawn, to avoid boiler continuous “switch on/off", the maximum temperature allowed by the DHW probe to switch off the burner is set to 15°C higher than the set-point, whereas to switch it on again the temperature must fall below the set-point + 8°C.

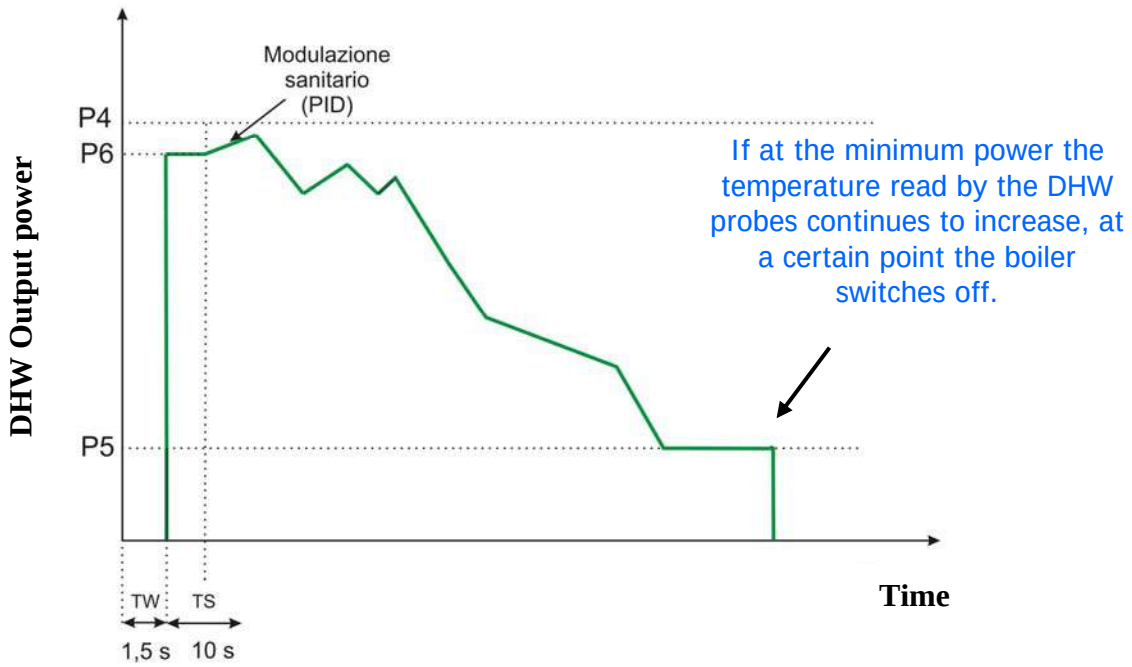

In case of poor thermal yield by the plate exchanger due to possible clogging and consequent overtemperature of the primary body, another PID type adjustment of the flow is added to the DHW modulation. Such operation occurs at a flow temperature higher than 81°C and disables when the flow temperature falls below 75°C.
In presence of double modulation, the gas flow rate supplied to the burner corresponds to the lowest modulation value between the two PID type calculated actions.

During the DHW mode, the pump is powered and the electric diverting valve is in DHW position, whereas the multifunction relay is in the rest condition.

Plate DHW modulation temperatures:

- DHW temperature setting range: ***35 °C ÷ 57 °C***
- DHW thermostat triggering temperature OFF = set point + *5°C*
- DHW thermostat triggering temperature ON = set point + *3°C*
- DHW thermostat triggering temp. upon intake (first 20 sec) OFF = *set point + 15° C*
- DHW thermostat triggering temp. upon intake (first 20 sec) ON = *set point + 8° C*
- Flow water thermostat triggering temperature with DHW OFF: *85*°C
- Flow water thermostat triggering temperature with DHW: *ON* 80°C
- Flow water PID triggering temperature with DHW: 81°C
- Flow water PID deactivating temperature with DHW: 75°C

Note: *In case a boiler is combined with a solar plant with instantaneous integration, we recommend setting the P14 parameter to 1. This increases the modulation range avoiding boiler hunting (start and stop) with inlet temperature very close to the set-point. In such case the limit temperatures are as follows*:

- DHW thermostat triggering temp. OFF with instantaneous solar integr.: *set-point + 10° C*
- DHW thermostat triggering temp. ON with instantaneous solar integr.: *set-point + 9° C*

TANK HEATER DHW MODULATION ***(version KRB only, P3=3)***

With the boiler in DHW or DHW+HEATING mode, the tank heater programme activation time generates a tank heater DHW request.
If the tank heater temperature read by the NTC probe is less than the *Tank heater ON precedence thermostat* intervention temperature (set-point 3°C), set on the boiler or remote control, and the flow temperature is below 70°C, automatic flame control can be disabled to start the burner ignition sequence.
At the end of this sequence, the power to the burner corresponds to the ignition power (P6). Subsequently, the power supplied will correspond to the flame modulation value which, with a PID-type action, allows the **flow modulation temperature** to be reached and maintained at the tank heater phase. This is calculated on the basis of the tank heater temperature requested and the current temperature measured by the probe. The value must be between a minimum limit (corresponding to the *requested tank heater temperature + 10°C*) and a maximum limit (85°C). Maximum flow modulation occurs when the difference between the *requested tank heater temperature* and the *current tank heater temperature* is greater than or equal to 10°C.
In tank heater DHW mode, the pump is in operation and the electric diverting valve is in DHW position, while the multifunction relay is in the off-state.

Tank heater DHW modulation temperature:

- DHW temperature setting range: ***35°C-65°C***
- Thermostat intervention temperature with tank heater precedence OFF = *set-point + 0°C*
- Thermostat intervention temperature with tank heater precedence ON = *set-point - 3°C*
- Maximum flow modulation temperature at tank heater phase = *85°C*
- Minimum temperature difference between tank heater request and flow modulation = *10°C*
- Temperature difference between tank heater request and current value for maximum flow modulation = *10°C*
- Temperature difference between tank heater request and current value for minimum flow modulation = *0°C*
- Flow thermostat intervention temperature with tank heater DHW OFF = *86°C*
- Flow thermostat intervention temperature with tank heater DHW ON = *70°C*

AMBIANT THERMOSTAT

With the boiler set on the "DHW + CH" or "Hearing only" operating mode, the closing up of ambient thermostat electric contact (as well as by the remote control or the zone board) will result in a request making heating modulation start.
WARNING: with parameter P16 it is possible to delay the ambient thermostat reading to allow the zone valves to open before the boiler pump starts (from 0 to 199 seconds).

AMBIENT THERMOSTAT TIMER (ANTIFAST)

During heating modulation, once the min. power supplied to the burner is reached and with the supplied power above the required one, the burner is switched off.
After 240 sec from the burner switching off (P11 parameter) if the flow is lower than the "set-point" the burner is switched on again.
The heating thermostat timer is reset:

- upon a DHW request;
- at the end of a heating request;
- selecting the "standby" or "DHW" mode or resetting the boiler;
- if the flow temperature value falls below the P27 parameter (40°C with standard range, or 20°C with reduced range).

ADJUSTABLE HEATING MAXIMUM OUTPUT

During the operation in heating mode the maximum output provided to the burner is equal to the one set by means of parameter P7 that corresponds to a percentage of the boiler maximum power set through parameter P4.

TEMPERATURE RANGE PRE-SELECTION

With parameter P10, without any external probe, it is possible to set two ranges (standard and reduced) to adjust the flow water by means of the boiler keys or the remote control:

P10 < 1 → heating temperature reduced range: 20 ÷ 45°C
P10 ≥ 1 → heating temperature standard range: 20 ÷ 78°C

Using an external probe instead, such parameter corresponds to the thermoregulation curve selection (refer to paragraph "Thermoregulation with external probe").

HEATING MODULATION WITH POWER ASCENT RAMP

Following a heating request by the ambient thermostat or remote control, if the water temperature read by the flow NTC probe is lower than the *heating thermostat intervention ON* temperature, consent is given to disable automatic flame control in order to start the burner ignition sequence (ignition power - P6).
At the end of this sequence, the power provided to the burner reaches the *negative ramp power* value (P8). It then passes from this value to the one set for the heating maximum power parameter (P7), with a ramp duration equal to settable parameter P12.

The flow water temperature is read constantly and the ramp is interrupted when the flame modulation point is reached with a PID-type action, until the set heating temperature is reached and maintained.

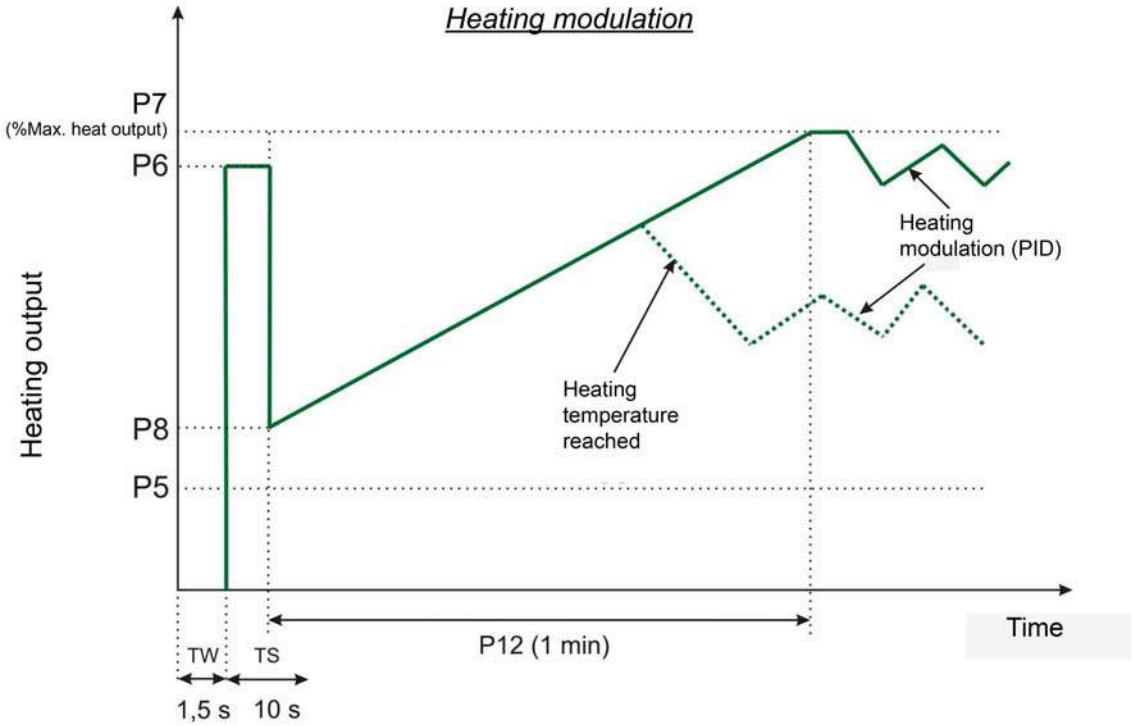

During the heating phase:

- with **P28 = 0** *(pump and diverting valve)*, the pump is running and the electric diverting valve is in the heating position;
- with **P28 = 1** *(heating pump and DHW pump),* the heating pump is running but the DHW pump remains OFF;
- with **P17 = 1** (*multifunction relay in "remote relay/TA1"* configuration), the relay is energised and returns to the off-state when there is a DHW request or the boiler is switched to OFF or DHW ONLY mode;
- with **P17 = 3** (*multifunction relay in TA2 request*), the relay is energised and returns to the off-state when there is a DHW request or if the boiler is switched to OFF or DHW ONLY mode.

During operation in heating mode, when there is a DHW request this has priority and interrupt the current function.

Heating modulation temperature - standard range (P10≥1)

- Heating temperature setting range: *20-78°C*
- Heating thermostat intervention temperature: OFF = *set-point + 5°C*
- Heating thermostat intervention temperature: ON = *set-point + 0°C*
- Heating thermostat timer (anti-fast) via parameter P11: *0-10 min, default 4 min with Tflow > P27*
- Heating thermostat timer reset temperature via parameter P27: *35-78°C, default 40°C*
- Timer on heating output ascent ramp via parameter P12: *0-10 min, default 1 min*

Heating modulation temperature - reduced range (P10<1):

- Heating temperature setting reduced range: *20-45°C*
- Reduced heating thermostat intervention temperature: OFF = *set-point + 2°C*
- Reduced heating thermostat intervention temperature: ON = *set-point - 2°C*
- Heating thermostat timer (anti-fast) via parameter P11: *0-10 min, default 4 min with Tflow > P27*
- Heating thermostat timer reset temperature via parameter P27: *20-40°C, default 20°C*
- Heating output ascent ramp time via parameter P12: *0-10 min, default 1 min*

The **set-point** depends on the heating temperature set via the boiler buttons, or the temperature set on the remote control.

WITH EXTERNAL THERMOREGULATION

One external temperature probe automatically modifies the heating flow temperature according to:

- the outdoor temperature measured;
- the thermoregulation curve selected;
- the selected fictitious room temperature.

The thermoregulation **curve** is selected by means of parameter **P10** (value from 0 to 3), whereas the **fictitious room temperature** is selected with the "**heating**" keys.

The board independently acknowledges the presence of the external temperature probe and activates the thermoregulation function, by keeping the flow temperature inside the heating temperature pre-selection range (20 °C ÷ 78 °C o 20 °C ÷ 45 °C).
If both the external probe and the remote control are present, assuming that the remote control is able to set and carry out its own thermoregulation, the modulation board sends the external temperature value to the remote control, and if the heating request is determined by the same control, this will determine the flow temperature according to its thermoregulation curve and the room temperature it has previously set.
Otherwise, if the heating request comes contemporaneously from the remote control and the room T. contact closure (on the board), both the remote control and the modulation board calculate independently the flow temperature according to reciprocal thermoregulation curves and set room temperatures; the highest value of the two will be used.

Thermoregulation curve setting

If keys "*reset*" and "- *heating*" are pressed together for three seconds, you will access the parameter setting mode.

Use keys "+/- *heating*", to select parameter P10:

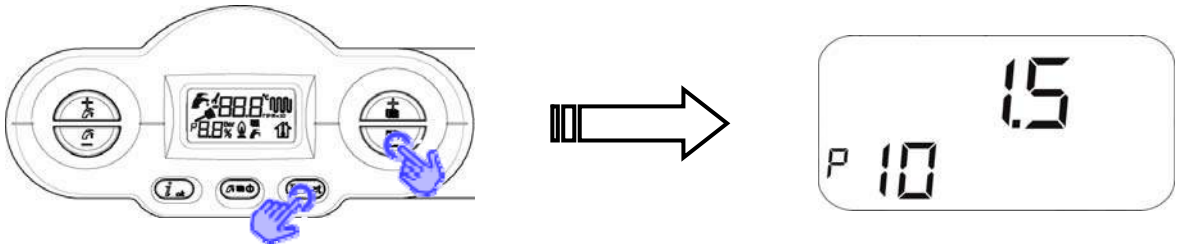

Press "*OK*" to confirm that parameter value has to be edited; the wrench symbol indicates that parameter value can be edited using keys "+/- *heating*":

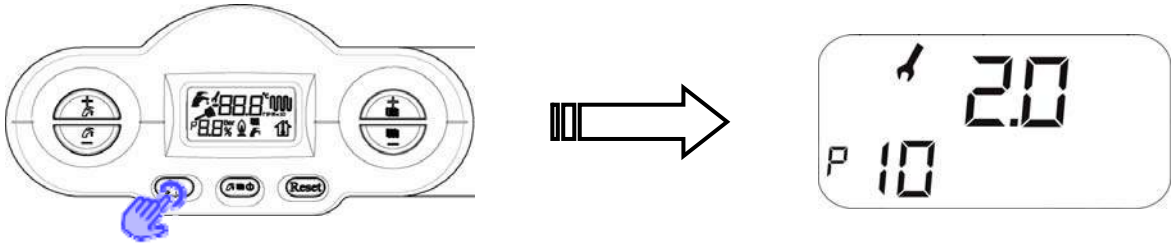

- **For high temperature systems**, we recommend setting parameter P10 to a value between 1 and 2.
- **For low temperature systems**, we recommend to setting parameter P10 to a value between 0.2 and 0.8.

Then confirm the modification of the parameter value by pressing "*ok*" and quit the setting with the "*reset*" key.

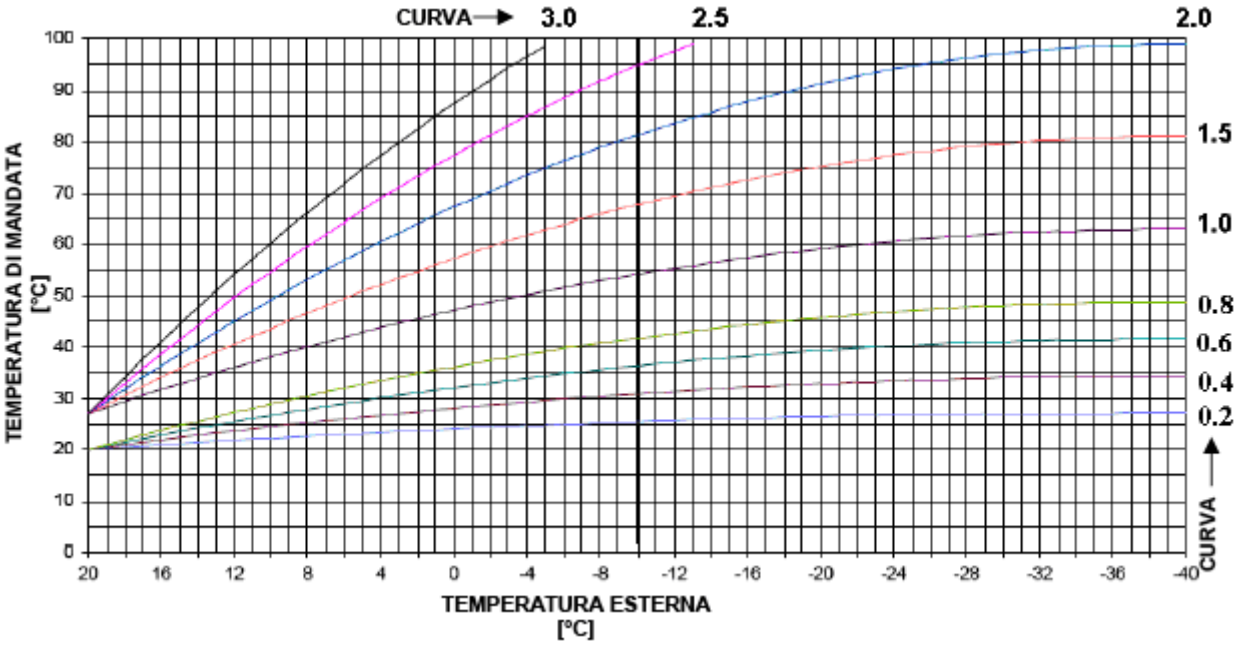

The curves indicated above refer to a request of a "*fictitious room temperature*" of 20°C. In case of required temperature different from 20°C, all curves are parallely translated.

Example of curve shifting with P10=1.5 and fictitious temperature from 20 to 25°C:

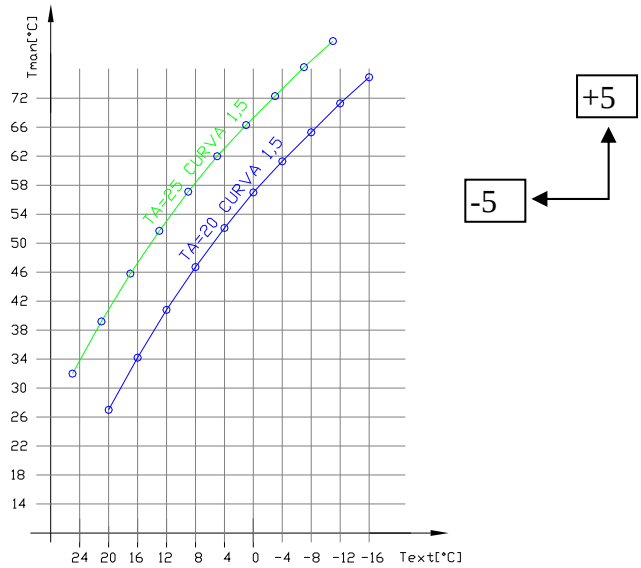

The choice of the curves is a procedure that can be performed with your eyes or a mathematic formula; in both cases it is necessary to check the temperature variations to correct and better chose the proper curve.

<u>In the first case</u> take a real value of external temperature as reference and link it to a desired flow value. Then chose the closest curve.

Example

at an external temp. of -4°C, a flow of 62°C is required; **curve: 1.5**

<u>In the second case</u> use the following formula:

$$\textbf{CURVE} = \frac{\text{Tmax} - 20}{20 - \text{Testmin}}$$

Where, Tmax is the maximum flow temperature and Textmin is the minimum external temperature.

Example

Low temperature:

Tmax = 44°C
Test = -10°C

$$\textbf{CURVE} = \frac{44 - 20}{20 - (-10)}$$

P10 curve = 0.8

High temperature:

Tmax = 70°C
Test = -10°C

$$\textbf{CURVE} = \frac{70 - 20}{20 - (-10)}$$

P10 curve = 1.7

Checking the thermoregulation curve setting

It takes time to chose the best curve. Consider the following suggestions:

- if upon external temperature decrease the room temperature increases, it is necessary to set a curve with a lower slope, i.e. a lower curve;
- if upon external temperature decrease the room temperature decreases, it is necessary to set a curve with a higher slope, i.e. a higher curve;
- Lastly, if the room temperature remains constant upon changing of the external temperature, the curve is correct.

If the room temperature is constant but different from the desired value it is necessary to translate the curve.
This occurs automatically by pressing the "+/- *heating*" keys on the boiler panel. In fact, with an external probe installed, such keys do not adjust the flow temperature but the fictitious desired one in a room ranging from 15°C to 35°C.

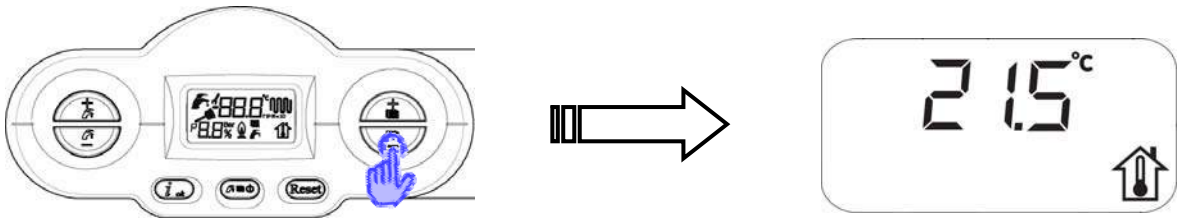

We recommend to set a value between 20°C and 25°C, or at least similar to the one set by means of thermostat.

PROGRAMMABLE MULTIFUNCTION RELAY

The boiler is provided with a multifunction relay (230 Vac, 10A cosφ1) which can be associated to a different function by means of the parameter P17 setting:

- **P17=0 Alarm reference**
  Upon each shutdown or fault the relay is excited:

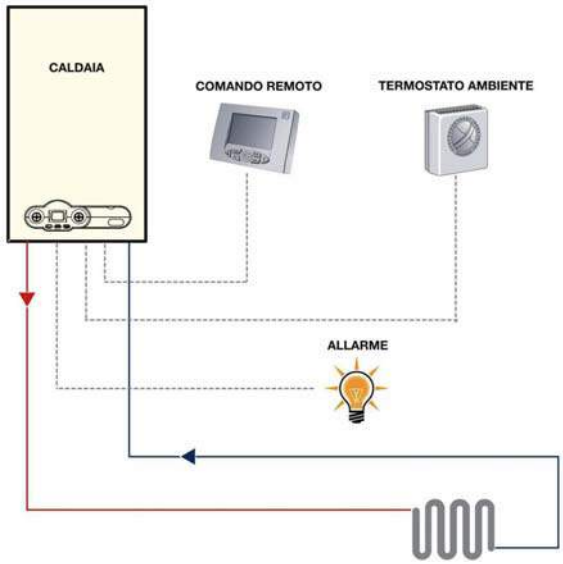

Electric connections:

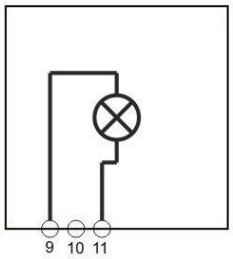

- **P17=1 Remote reference**
  Upon each request by the remote control (or TA1), the relay is excited:

Electric connections:

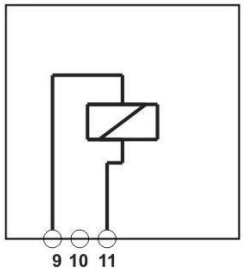

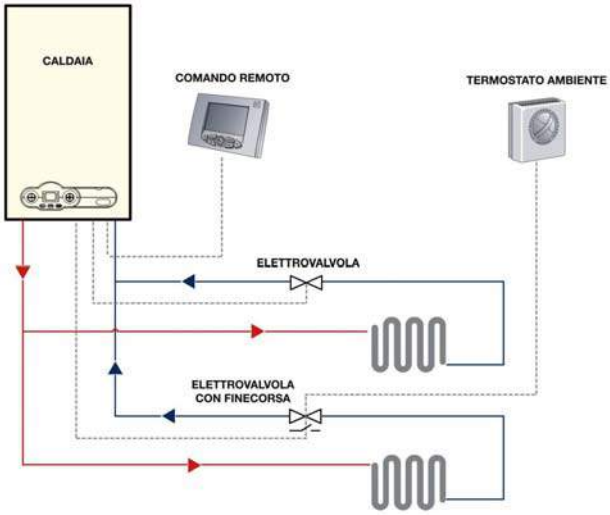

- **P17=3 Ambient thermostat reference**
  Upon each request by the ambient thermostat TA2, the relay is excited:

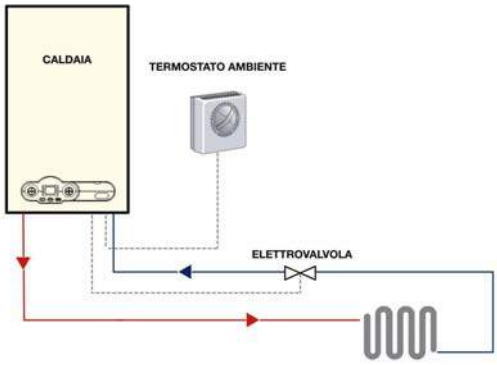

Electric connections:

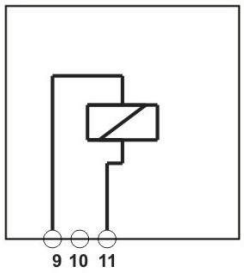

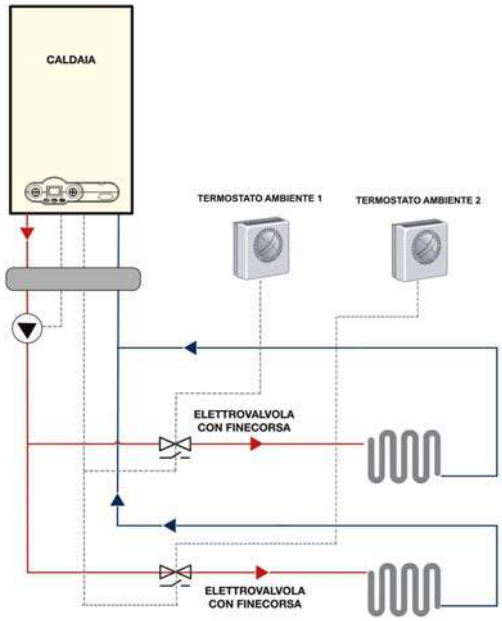

OPENTHERM REMOTE CONTROL PRE-SETTING

The board is provided with an internal interface that allows the connection of an OpenTherm protocol-based remote control. This latter, besides serving as an ambient thermostat for its zone, allows to set some of the boiler main parameters. The remote control must be connected to the board with two non-polarized connectors protected against short-circuits. ***Instead of the remote control an ambient thermostat connection*** (clean contact) is arranged, that when closed for more than 10 seconds generates a heating request for the remote control area which finishes when the contact remains open for more than one second.
When the remote control is not connected and/or does not communicate, all settings are made from boiler. Board and remote control communicate in each operating mode: DHW, DHW+HEATING, HEATING or STANDBY.
A communication drop will entail the continuous attempt to restore it but, after 1 minute, the board will resume operation in local mode until connection is restored. In this case the system temporarily ignores the heating request that could be generated by a possible contact connected on opentherm. When the connection is active, remote control has a priority over boiler switch, and it totally enables/disables DHW and CH functions.
The remote control can request the boiler and display the flow, DHW, external probe temperatures, the temperatures set for DHW and heating, the current modulation level, as well as the error code. It can also display the different operation states (DHW, heating, flame lighting, fault presence or shutdown) and it can reset the boiler after a shutdown for a limited number of times and period (not more than 3 times in 24 hours).
Warning: the remote control allows to access only the first 29 parameters.

PROVISION FOR CONNECTION TO ADDITIONAL BOARDS

One or more additional boards (up to 4) can be connected to the boiler board, to control a zone-based system and a solar system.
In addition to the multifunction relay controlling the direct zone (TA1) at a high temperature, up to three additional boards can be mounted to control up to three mixed zones, plus an additional board for controlling a solar system, which has two configurations).

IMPORTANT. The boiler control panel can hold up to two additional boards (for controlling a system with up to three zones, or two zones plus a solar system). In the case of complex systems requiring extra boards, these boards must be positioned outside the boiler, with a separate control panel.

RS connection and settings

Regardless of the number of boards used, each board must be connected to the boiler board in cascade via an RS485 connection, as shown in the diagram on the right:

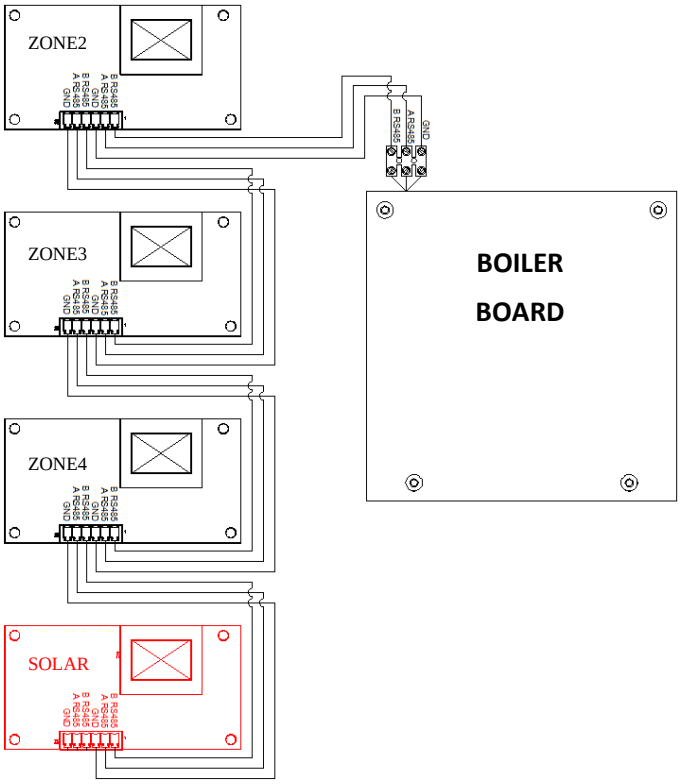

The boiler boar dand the additional board are provided with a **jumper** that closes the 485 communication line in case of difficulty in transmitting data between the boards, due to very long connection lines or electromagnetic interferences.
This jumper must only be left on the last board in cascade; all the others, including the one on the boiler board, must be removed.

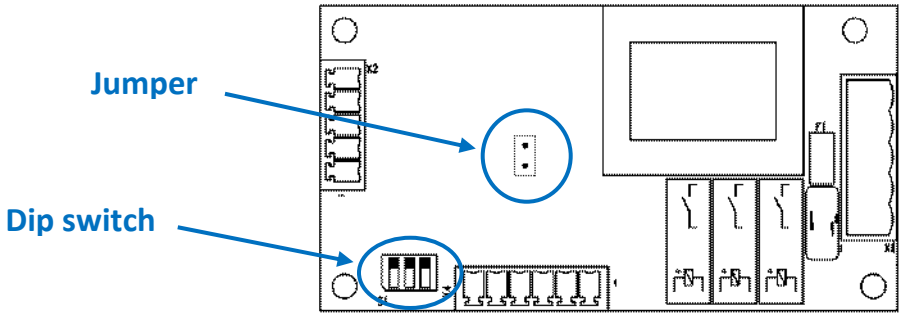

OFF-OFF-OFF:	MIXED ZONE2
OFF-ON-OFF:	MIXED ZONE3
ON-OFF-OFF:	MIXED ZONE4
ON-ON-OFF:	COMPLEX SOLAR

Each 0SCHEZON01 additional board with the dip switches must be set in such a way as to associate it to the zone to be controlled or to the solar system.
Only the first two of the three dip switches are used for the setting (the third one must be left in the “down” position, i.e. OFF).

Wiring diagrams

The heating zones 1 and 2 can be controlled by the remote control (TA1) or the ambient thermostat (TA2) that can be connected to the boiler boards; zones 3 and 4 are activated directly by the ambient thermostat connected to the relevant zone board. Zones 3 and 4 cannot support control by the safety flow line thermostat (TSM), which must be mounted in series on the pump power supply line and will not be detected as a fault.
The solar collector probe (SCS) and the solar tank heater probe (SBS) are maintained on the boiler board. The solar valve probe (SVS) must be connected to the additional board.

Zone 2

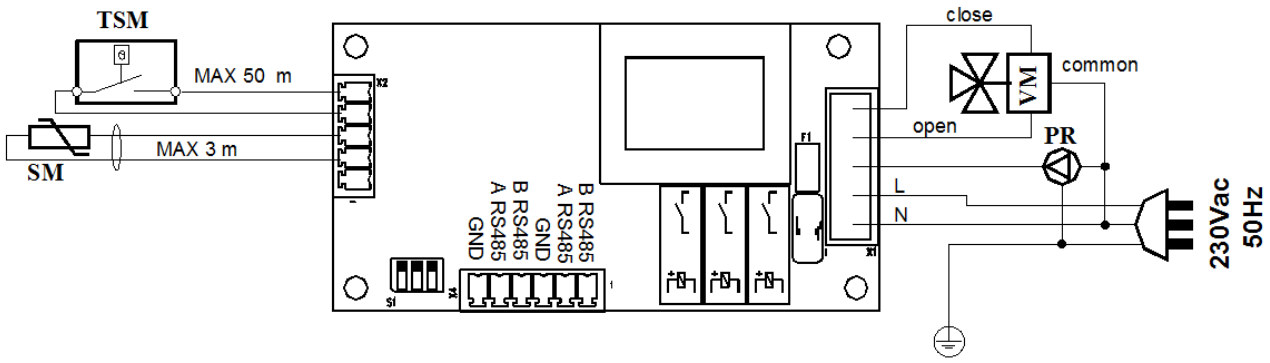

Zones 3 and 4

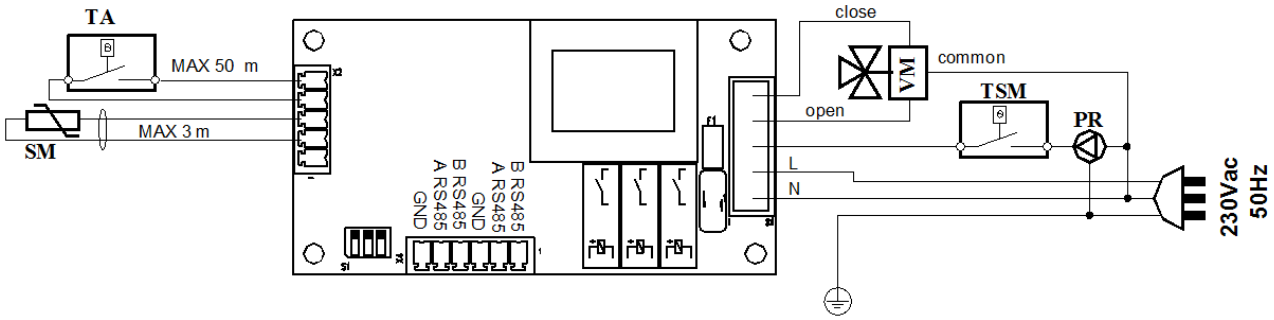

Solar

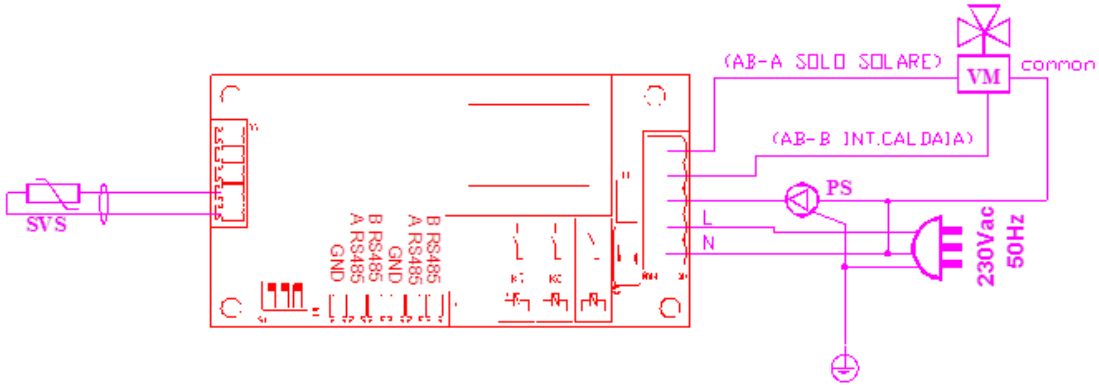

The zone board also comes with a bi-colour LED showing the following indications:

- *Green* → pump active;
- *Red, quick blinking* → valve opening;
- *Red, slow blinking* → valve closing;
- *Green flash* → boards with no request;
- *Red, very slow blinking (1s on, 1s off)* → communication with boiler board not working;
- *Red, fixed* → zone 2 safety thermostat open;
- *Red, fixed + green, fixed* → flow probe faulty with E36 error on the boiler display.

Zone setting

Each zone is configured for the area of competence via the dip switches mounted on the associated board (see above), and by entering on the boiler board the number of connected additional boards (max. 4) by setting parameter **P60**.
If control of zones 1 and 2 differs from standard control (remote control assigned to zone2 and ambient thermostat to zone1), you change the combination via parameter **P61**.

At this point, you can access parameter setting for each zone:

Zone 1:
Parameter P10 setting to enter the thermoregulation curve (with an external probe) or the operating range (without an external probe).
Regulation via the heating button of the fictitious ambient temperature (with an external probe) or the fixed-point flow value (without an external probe) according to the selected range. Parameter P32 displays the calculated flow temperature, and parameter P31 the current value read by the boiler probe.

Zone 2:
Parameter P62 setting to enter the thermoregulation curve (with an external probe) or the operating range (without an external probe).
Regulation via the heating button of the fictitious ambient temperature (with an external probe) or the set-point flow value (without an external probe) according to the selected range. Parameter P33 displays the calculated flow temperature, and parameter P34 the current value read by the boiler probe.

Important. *If zones 1 or 2 are remote controlled, the boiler board communicates to the remote control the minimum and maximum flow limit according to the curve set by the relevant parameter (reduced or standard range), and regulation of the set-point (without an external probe) or the fictitious temperature (with an external probe) must be carried out via the remote control.*

Zone 3:
Parameter P66 setting to enter the thermoregulation curve (with an external probe) or the operating range (without an external probe). Regulation via parameter P67 of the fictitious ambient temperature (with an external probe) or the set-point flow value (without an external probe) according to the selected range. Parameter P36 displays the calculated flow temperature, and parameter P37 the current value read by the boiler probe.

Zone 4:

Parameter P70 setting to enter the thermoregulation curve (with an external probe) or the operating range (without an external probe). Regulation via parameter P71 of the fictitious ambient temperature (with an external probe) or the set-point flow value (without an external probe) according to the selected range. Parameter P39 displays the calculated flow temperature, and parameter P40 the current one detected by the boiler probe.

N.B. *With simultaneous heat requests from different zones, the boiler flow set-point corresponds to the highest value. The flow set-point requested by the mixed zones is equal to the value calculated by the thermoregulation plus the value of parameter P75 (default 5°C), to compensate for any unbalance in systems with uneven flow rates.*
When DHW is withdrawn, any heat requests are interrupted and resumed only at the end of the withdrawal.
If the boiler board is on OFF or SUMMER ONLY, the heating functions are not enabled.

Solar setting

The solar board is used to control *complex* solar panel systems when two solar elements (pump + diverting valve) are involved, or when the multifunction relay is used to control a zone of the system.

CONFIGURATION 1:

Only suitable for *instantaneous* type boilers (P3=1), where the complex solar panel system to be controlled heats the solar accumulation in a forced circulation system via the *pump* ***PS*** and the boiler is integrated instantly for DHW, via the *diverting valve* ***VM***.

The system layout is shown below.

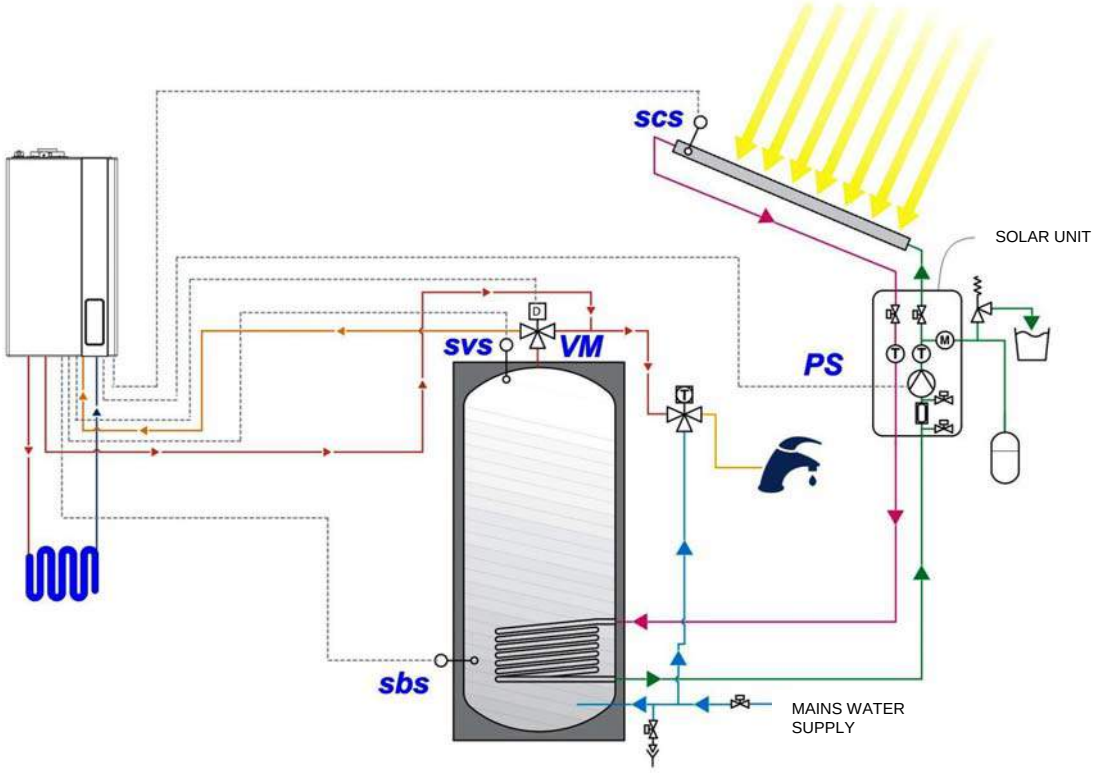

Tank heater filling function (*pump ON*)

The tank heater temperature is set, via parameter P19, to a value between 10 and 90°C (default 60°C).
The PS solar pump is activated under the following conditions:

- *Tsvs < P19-2°C*
  and
- *Tscs – Tsbs > ΔT ON (P20)*
  and
- *Tscs > Tmin pump collector ON (P23)*
  and
- *Tscs < Tmax pump collector ON (P22-5°C)*

where *Tsvs* is the temperature read by the upper probe of the solar tank heater; *Tsbs* is read by the lower probe, and *Tscs* is read by the solar collector probe.

Tank heater filling function (*pump OFF*)

The PS solar pump is deactivated under the following conditions:

- *Tsvs > P19*
  or
- *Tscs – Tsbs < ΔT OFF (P21)*
  or
- *Tscs < Tmin pump collector OFF (P23-5°C)*
  or
- *Tscs > Tmax pump collector OFF (P22)*

Important. *In the event of a failure of the SVS solar valve probe, the diverting valve activates in the solar mode only and tank heater takes place following the same logic, taking into consideration the SBS solar tank heater probe and not the faulty one.*

Boiler integration function

This function controls the VM motorised valve and activates the boiler burner only if the solar tank heater temperature is too low to meet the requirements.
The VM valve remains deactivated (boiler integration) when the temperature read by the SVS probe is lower than the *DHW set-point temperature -2°C.* It is powered (solar only) when the temperature of the solar tank heater probe reaches the *DHW set-point* set on the boiler, or if the probe is faulty.
When the VM valve is in the solar-only position, the boiler cannot operate in the DHW mode.

Important. *This function is only active if the DHW+HEATING, HEATING ONLY or DHW ONLY operating mode is set on the boiler. With the boiler OFF, the VM valve remains powered on.*

Heat dissipation from the collector

If the solar tank heater reaches the set temperature, this function prevents the solar collectors from stagnating for a long time, which may cause them high thermal stress. For this reason, the PS solar pump is reactivated according to the following logic:

Tscs > (P22-10°C)
and
Tsvs < 95°C

and stopped when one of the following conditions occurs:

Tscs < (P22 -12°C)
or
Tsvs ≥ 95°C

This function is also disabled with Tscs > P22, and reactivated with Tscs < P22 decreased by 5°C.

Important. *This function is only active if the DHW+HEATING, HEATING ONLY or DHW ONLY operating mode is set on the boiler. It is not active in the event of failure involving the SVS solar valve probe.*

Tank heater cooling function

This function cools the tank heater to the set-point value, by dissipating any excessive heat in the tank heater on the solar collector. This only occurs if the solar tank heater has exceeded the set-point temperature following activation of the *heat dissipation* function.
If the remote control is not connected, the *tank heater cooling* function is always active. Otherwise, it is only enabled from 00.00am to 6.00am.
Activation of the PSOL solar pump for tank heater cooling:

Tsvs > P19 + 2°C
and
Tscs < Tsbs-ΔT ON (P20)

This function deactivates when the PSOL switches off under the following conditions:

Tsvs < P19
or
Tscs > Tsvs-ΔT OFF (P21)

Important. *This function is only active if the DHW+HEATING, HEATING ONLY or DHW ONLY operating mode is set on the boiler. It is not active in the event of failure involving the SVS solar valve probe.*
Set parameter P26 to 1 to activate this function,

Solar collector anti-freeze function

This function must be enabled by setting parameter **P24** to **1**. In this way, when the temperature read by the collector probe is below 4°C, the PSOL solar pump activates until the temperature reaches 5°C.

CONFIGURATION 2:

Only suitable for boilers *with tank heater* (P3=3), where the complex solar panel system to be controlled heats solar accumulation in a forced circulation system via the *pump* ***PS*** and excess solar energy is dissipated through a secondary service line, via the *diverting valve* ***VM***.

The system layout is shown below.

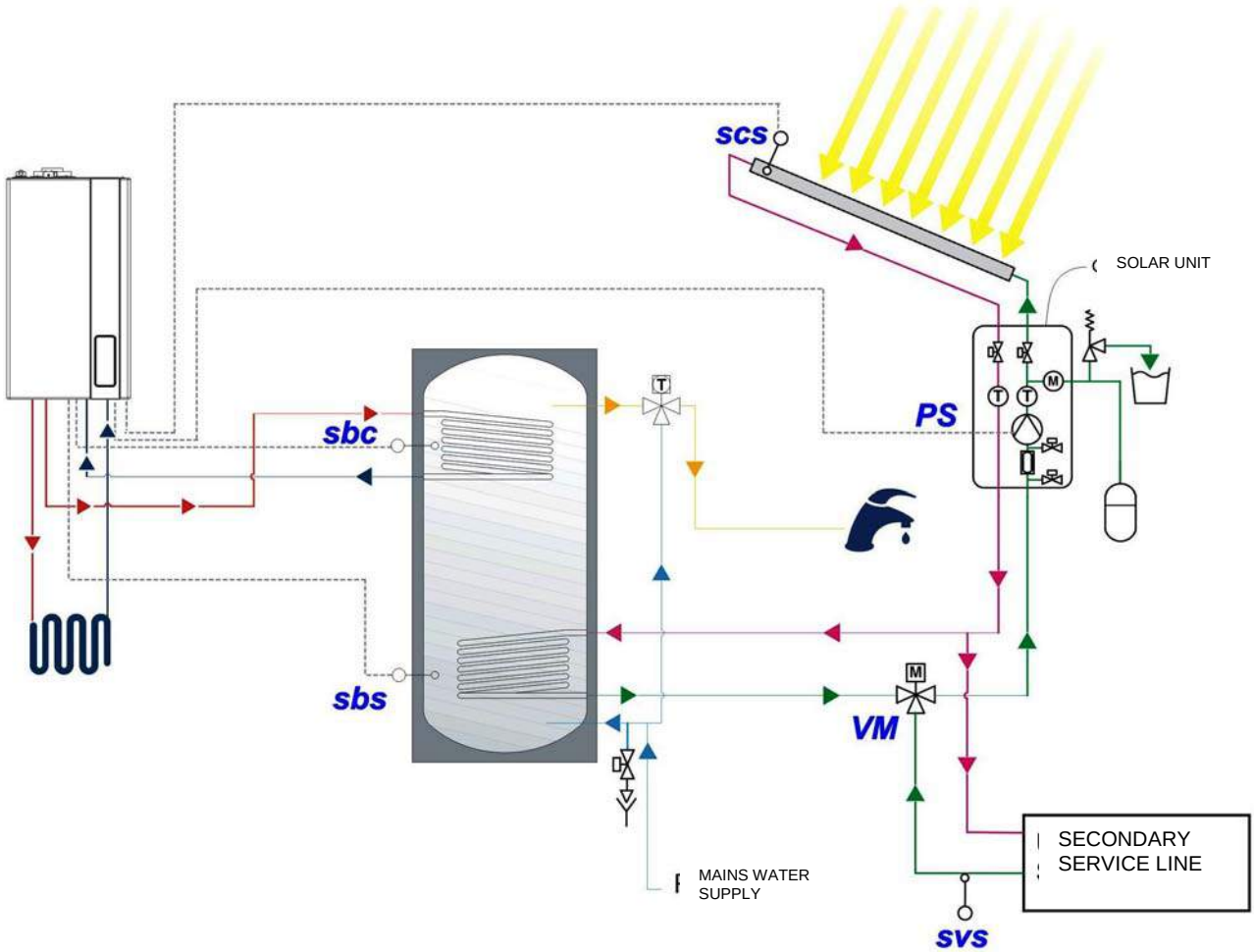

Tank heater filling function (*pump ON*)

The tank heater temperature is set, via parameter P19, to a value between 10 and 90°C (default 60°C).
The PS solar pump activates under the following conditions:

- *Tsbc < P19-2°C*
  and
- *Tscs – Tsbs > ΔT ON (P20)*
  and
- *Tscs > Tmin pump collector ON (P23)*
  and
- *Tscs < Tmax pump collector ON (P22-5°C)*

where *Tsbc* is the temperature read by the upper probe of the solar tank heater, *Tsbs* is read by the lower probe, and *Tscs* is read by the solar collector probe.

Tank heater filling function (*pump OFF*)

The PS solar pump is deactivated under the following conditions:

- *Tsbc > P19*
  or
- *Tscs – Tsbs < ΔT OFF (P21)*
  or
- *Tscs < Tmin pump collector OFF (P23-5°C)*
  or
- *Tscs > Tmax pump collector OFF (P22)*

Important. *In the event of a failure on the SBC boiler tank heater probe, tank heater filling takes place following the same logic, taking into consideration the SBS solar tank heater probe rather than the faulty one.*

Heat dissipation from the collector

If the solar tank heater reaches the set temperature, this function prevents the solar collectors from stagnating for a long time, which may generate high thermal stress. For this reason, the PS solar pump reactivates (with the VM valve on *tank heater filling*) according to following logic:

Tscs > (P22-10°C)
and
Tsbc < 95°C

and stops when one of the following conditions occurs:

Tscs < (P22 -12°C)
or
Tsbc ≥ 95°C

This function is also disabled with Tscs > P22, and reactivated with Tscs < P22 minus 5°C.

Important. *This function is only active if the DHW+HEATING, HEATING ONLY or DHW ONLY operating mode is set on the boiler. It is not active in the event of failure involging the SBC boiler tank heater probe.*

Heat discharge function

This can only be activated with **P76=1**. This function is used to control a VM motorised solar valve in order to discharge the solar energy heat on a secondary service line.

This only occurs if the *heat dissipation from the collector* function can no longer be enabled because the maximum temperature in the tank heater (95°C) has been reached.

The VM valve is powered in the *heat discharge* position, according to the following logic:

Tscs > (P22-10°C)
and
Tsbc > 95°C

At this point (with VM on *heat discharge*), the PS solar pump is powered when:

Tscs > Tsvs

This function deactivates then PS switches off under the following conditions:

Tscs < (P22 -12°C)
or
Tscs > P22

Important. *In the event of a failure involving the SBC boiler tank heater probe, this function is not performed. The same applies if an operating mode other than DHW+HEATING, HEATING ONLY or DHW ONLY is set on the boiler.*

Tank heater cooling function

This function cools the tank heater to the set-point value by dissipating excessive tank heater heat on the solar collector. This only occurs when the solar tank heater exceeds the set-point temperature following activation of the *heat dissipation* function.

If remote control is not connected, the *tank heater cooling* function is always active. Otherwise, it is only enabled from 00.00am to 6.00am.

Activation of the PSOL solar pump for tank heater cooling:

Tsbc > P19 + 2°C
and
Tscs < Tsbs-ΔT ON (P20)

This function deactivates when the PSOL switches off under the following conditions:

Tsbc < P19
or
Tscs > Tsbs-ΔT OFF (P21)

Important. *This function is only active if the DHW+HEATING, HEATING ONLY or DHW ONLY operating mode is set on the boiler. It is not active in the case of a failure involving the SVS solar valve probe.*
*Set parameter **P26** to **1** to activate this function.*

Anti-freeze function on solar collector

This function must be enabled by setting parameter **P24** to **1**. In this way, when the temperature read by the collector probe is below 4°C, the PSOL solar pump activates until the temperature reaches 5°C.

Logical operating diagram for *heat dissipation / heat discharge*

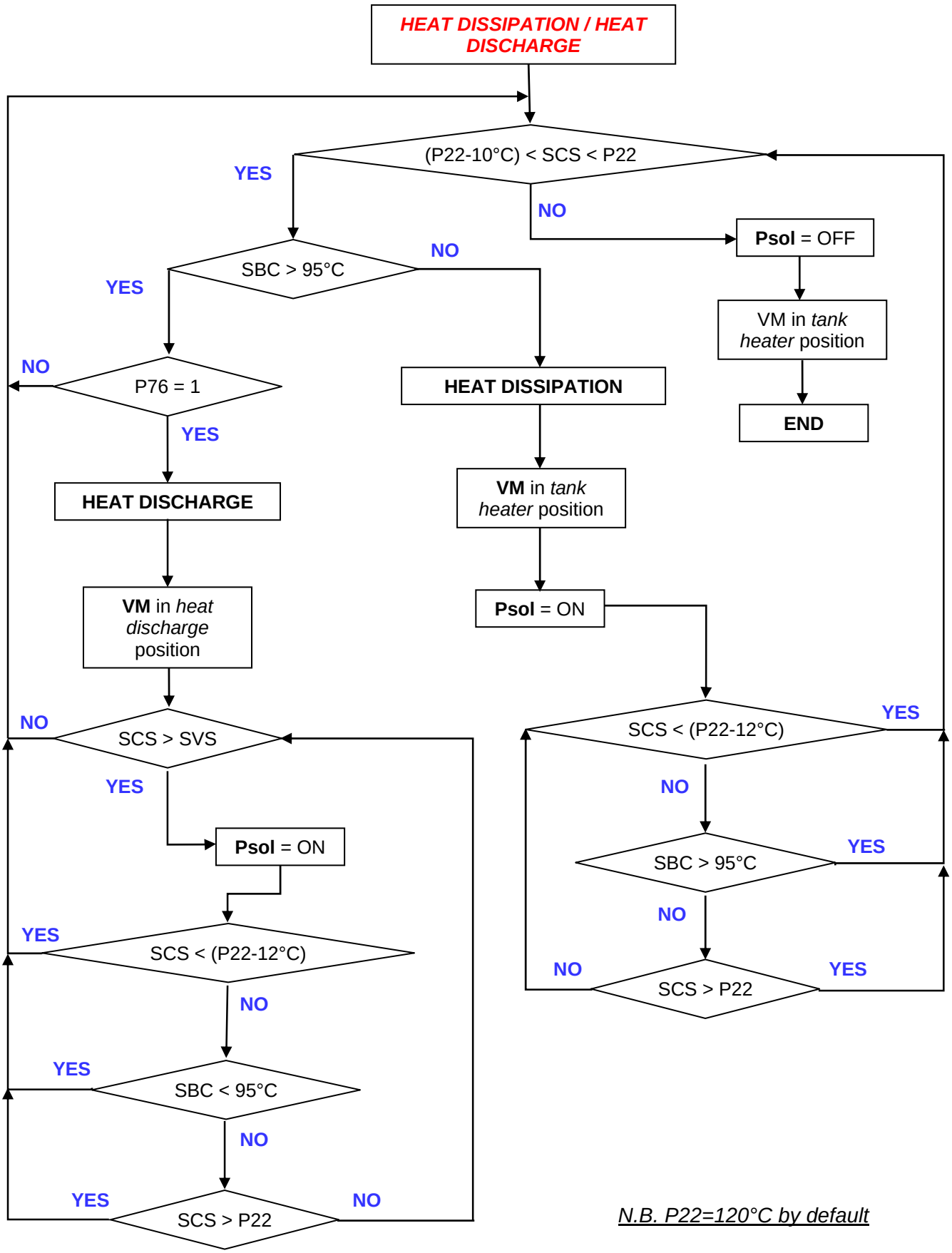

N.B. P22=120°C by default

Solar function characteristics

When the solar pump activates, the boiler display shows the icon indicating that the pump is active.
If there is a failure involving the solar tank heater probe (SBS), or the solar collector probe (SCS), the solar pumps switches off immediately and the fault is indicated on the boiler board interface and the remote control (if connected), via the associate error codes (E28 and E24, respectively).

Select the parameters P91 and P92 to force the solar loads during maintenance work. In this way, the additional board relays are energised until the parameter is reset at its former value.

Characteristics of the additional board

Power supply	230V AC -15 to +10% 50Hz
Load output	230V AC, 1° max
Flow probe	NTC 10k Ohm @25°C B3435 Max. 3 metres
Solar probe	PT1000 Max. 100 metres
Correct flow probe operating range	-5°C to +120°C
Correct solar probe operating range	-40°C to +290°C
Mixing valve deactivation range due to set-point reached	Set+1.5°C / Set-2°C
Mixing valve full opening timer	From 0 to 300s (P74)
Initial closure timer with powered board	P74 + 40s
Request end closing timer	P74 + 20s
Post-circulation timer	From boiler, with P13
Circulation pump anti-shutdown timer	3s every 24 hours
Anti-freeze timer	15 min
Anti-freeze intervention temperature	< 5°C

TEMPERATURE PROBE CHECK

The system checks the fault status of the probes connected to the modulation board. A fault occurs when the probe is not powered (except for the external probe), or when it reads a temperature value outside the correct probe operating range:

- ***External probe*** failure ***(E23)***: each request for operation on heating mode which entails ignition of the burner is carried out without taking into account the calculation algorithm: the curve value is used to determine the operating range (standard or reduced) with the set-point corresponding to that entered.

  Correct operating range: *from -40 to +50°C, general tolerance: ±3°C.*

- ***Flow probe*** failure ***(E05)***: the burner switches off immediately and the fan runs at the ignition power.
  The pump runs until the fault is removed, with the diverting valve in the heating position if before the fault there was a request for heating, flow-return anti-freeze or chimney-sweep, or there were no request at all.
  The pump runs with the diverting valve in the DHW position only if before the fault there was a request during DHW or anti-freeze operation.

  With P17=1 and P17=3 (multifunction relay), the relay remains energised until the fault is removed if there was a request for heating, flow-return anti-freeze, chimney-sweep, or there were no request at all.

- ***Return probe*** failure ***(E15)***: the burner switches off immediately and the fan runs at the ignition power.
  The pump runs until the fault is removed, with the diverting valve in the heating position if before the fault there was a request for heating, flow-return anti-freeze or chimney-sweep, or there were no request at all. The pump runs with the diverting valve in the DHW position only if before the fault there was a request during DHW or anti-freeze operation.

  With P17=1 and P17=3 (multifunction relay), the relay remains energised until the fault is removed if there was a request for heating, flow-return anti-freeze, chimney-sweep, or there were no request at all.

- ***Plate DHW probe*** failure ***(E06)***: when there is a request for operation on DHW mode, the burner does not activate (it switches off, if it is ON). The pump activates for as long as the request continues, after which (and without any further requests), it performs a 30-second post-circulation cycle, which is performed even without any operation request. When there is a request for operation on heating, flow anti-freeze or chimney-sweep mode, the request is normally handled.
  The system resumes normal operation when the fault is eliminated.

  The table below shows the resistance values (Ω) of the flow, return, DHW and tank heater NTC probes at the various temperatures.

Probe calibration: ***10k Ohm at 25°C***

T °C	0	2	4	6	8
0	27203	24979	22959	21122	19451
10	17928	16539	15271	14113	13054
20	12084	11196	10382	9634	8948
30	8317	7736	7202	6709	6254
40	5835	5448	5090	4758	4452
50	4168	3904	3660	3433	3222
60	3026	2844	2674	2516	2369
70	2232	2104	1984	1872	1767
80	1670	1578	1492	1412	1336
90	1266	1199	1137	1079	1023

Correct operating range: *from -20 to +120°C, general tolerance*: ±*3°C.*

- ***Solar probe*** failure ***(E24, E27, E28):***
  With P18=0, if the solar tank heater probe (SBS) fails, the VM diverting valve moves to the solar-only position (no integration by the boiler).
  With P18=1, if the failure involves the solar tank heater probe (SBS) or the solar collector probe (SCS), the PS solar pump switches off.

  With complex solar panel systems controlled by the 0SCHEZONE01 additional board, the failure on the solar valve probe (SVS) causes the diverting valve to shift to the solar-only position, and the *heat dissipation* and *tank heater cooling* function is inhibited.

  When there is a request for operation on heating, flow anti-freeze or chimney-sweep mode, with or without a request for DHW, the request is normally handled. The system resumes normal operation when the fault is eliminated.

  Resistance values (Ω) of the PT1000 solar probes at the various temperatures.

  Probe calibration: ***1k Ohm for 0°C***

Temperature °C	Resistance Ω	Temperature °C	Resistance Ω
-20	922	60	1232
-10	961	70	1270
0	**1000**	80	1309
10	1039	90	1347
20	1078	100	1385
30	1118	110	1422
40	1155	120	1460
50	1194	130	1499

  Correct operating range: from *-40°C to +290°C, general tolerance: ±3°C*.

- ***Flue gas probe*** failure ***(E07)***: the burner switches off immediately and the fan runs at the ignition output for 6 minutes.
  The pump performs the post-circulation cycle with the diverting valve on heating, if there was a request for heating, flow-return anti-freeze or chimney-sweep before the fault occurred, or if there was no request on the boiler. The pump runs with the diverting valve on DHW only if there was a request for DHW or DHW anti-freeze before the fault.

  Refer to the table on the previous page for details on the resistance values (Ω) of the flue gas NTC probe at the various temperatures.

  Correct operating range: *from -20 to +180°C, general tolerance: ±3°C.*

Important. If the boiler or remote control is OFF, any fault is merely signalled; all the other boiler operating elements (gas valve, fan, pumps, three-way valve and multifunction valve) remain in the home position.

BRUSHLESS FAN WHOLENESS CHECK

The fan speed is constantly monitored to check for any fault condition. In standby status (fan in rest condition) a speed higher than 500 rpm for more than 30 seconds triggers an alarm with consequent shutdown.
At the beginning of the rotation request the detected speed must be higher than 700 rpm and within the fan maximum set speed (set-point ± 300 rpm) within 10 seconds, otherwise a fan alarm will be triggered with consequent shutdown.
During the operation, if the detected speed is lower than the negative range (setpoint - 300 rpm), and at any rate lower than the minimum rotation speed for working fan (700 rpm), or higher than the positive range (setpoint + 300 rpm), for more than 30 seconds, the gas valve and igniter power supply is interrupted. If the fault remains for more than 10 seconds, the fan alarm signal is triggered with consequent shutdown.
At the end of the rotation request the detected speed must be lower than 500 rpm within 30 seconds, otherwise a fan alarm is triggered with consequent shutdown. The faulty fan signal is interrupted when the speed parameters acquired by the HALL sensor are within the preset limits.

ANTI-SHUTDOWN FUNCTION

Boiler pump and diverting valve

The electronic board calculates the time elapsed since the pump has been disabled; if it corresponds to 24 hours, the pump and valve activate for 30 sec.
During the pump anti-shutdown function, the burner remains off and the timer resets at each activation of the pump for any request.
Any request for operation on CH, DHW or anti-freeze mode will have priority, and the function in progress will be forced to end immediately.

Multifunction relay

The multifunction relay performs the anti-shutdown function as indicated in the previous paragraph only if it is set as a pump or valve (P17=1, P17=2 and P17=3).
The relay does not perform the anti-shutdown function if it is set to generate fault and error signals (P17=0).

PUMP POST-CIRCULATION FUNCTION

At the end of a heating, anti-freeze or chimney-sweep request, the burner (if ON) switches off immediately. The pump continues to be powered for 30 sec (this time can be adjusted via parameter P13). The same applies to the multifunction relay with P17=1 or P17=3 at the end of each request by the remote control or the associated ambient thermostat.
At the end of a request for operation on plate DHW or tank heater mode, the pump remains powered for a further 30 seconds, with the diverting valve switched to DHW mode. In the absence of any request, if the water temperature read by the flow NTC probe exceeds 78°C, the pump continues to be powered until the flow temperature falls below this value. In this case the diverting valve switches to heating mode.
Any request for operation on CH, DHW, anti-freeze or chimney-sweep mode has priority, and the post-circulation function will be forced to end immediately.

POST-VENTILATION FUNCTION

At the end of a request for operation, the burner (if ON) is switches off immediately and the fan remains powered on for 10 seconds (post-ventilation timer).
Any request for operation on CH, DHW, anti-freeze, chimney-sweep mode will have priority, and the ventilation function in progress will be forced to end immediately.
The post-ventilation function is also activated when the water temperature read by the flow NTC probe exceeds 95°C. It ends when the temperature is below 90°C. The post-ventilation function is performed at the ignition speed (parameter P6) + 900 rpm.

Flow

The flow NTC probe measures the temperature of the water in the boiler and when it falls below 5°C, a request for operation on flow anti-freeze mode is generated, with consequent burner ignition.
At the end of the ignition sequence, the output supplied to burner will be forced to the minimum value. The request for operation on flow anti-freeze mode ends when the flow temperature exceeds 30°C or when an operating time of 15 min is reached.
Any request for operation on heating mode has priority and causes the function in progress to terminate.
During a flow anti-freeze function, the boiler pump activates and the three-way valve switches to the heating position.
With P17 equal to 1 or 3, the multifunction relay is also energised.
If flame control shuts down and the burner cannot be ignited, the anti-freeze function activates pump circulation with the multifunction relay active (if P17=1 or P17=3).

Important. The anti-freeze function only protects the boiler only not the heating system.

DESCRIPTION	ON	OFF
Flow anti-freeze function	5°C	30°C (or after 15' of operation)
General temperature tolerance	± 3°C	

Plate DHW *(KC only)*

The DHW NTC probe measures the temperature of the DHW. When this value falls below 5°C, a request for DHW anti-freeze operation is generated. The pump activates and after a 30-second delay, the burner ignites with the output forced to the minimum value.
During DHW anti-freeze operation, the temperature read by the flow probe is kept monitored, and if it reaches 60°C the burner switches off. The burner switches on again if the request for anti-freeze operation is still present and the flow temperature is below 60°C.
The request for operation on DHW anti-freeze mode ends when the DHW temperature exceeds 10°C or when an operating time of 15 min. is reached.
Any request for operation on DHW mode has priority, and causes the function in progress to terminate.
During DHW anti-freeze operation, the pump is powered on, the electric diverting valve is in DHW position and the multifunction relay (if P17=1 or P17=3) is in the home position. If

flame control shuts down and the burner cannot be ignited, the anti-freeze function activates pump circulation.

DESCRIPTION	ON	OFF
DHW anti-freeze function	5°C	10°C (or after 15' of operation, or if the flow temperature is > 60°C)
General temperature tolerance	± 3°C	

Tank heater *(KRB only)*

The tank heater NTC probe measures the temperature of the water in the tank heater. When this value falls below 5°C, a tank heater anti-freeze operation request is generated. The pump activates and after a 30-second delay, the burner ignites with the output forced to the minimum value.

During a tank heater anti-freeze operation the temperature read by the flow probe is kept monitored and if it reaches 60°C the burner switches off. The burner switches on again if the request for anti-freeze mode is still present and the flow temperature is lower than 60°C.

The request for operation tank heater anti-freeze mode ends when the tank heater temperature exceeds 10°C or when an operating time of 15 min. is reached.

Any request for operation on heating or DHW mode has priority, and causes the function in progress to terminate.

The anti-freeze function is active with the boiler regardless of the operating mode. If the flame control shuts down (when it is impossible to ignite the burner), the anti-freeze function performs a circulation of the pump with the three-way valve on DHW mode.

DESCRIPTION	ON	OFF
Tank heater anti-freeze function	5°C	10°C (or after 15' of operation)
General temperature tolerance	± 3°C	

ANTI-LEGIONELLA FUNCTION *(KRB only)*

The anti-legionella function is available on the boilers in the tank heater version (P3=3), and it is always enabled. This function activates at the end of every 15-day period. After this time, a tank heater heating phase starts up with the fixed set-point at 65°C. It lasts 30 minutes.

The anti-legionella function takes priority over any DHW, heating or anti-freeze cycle in progress at the time when this function activates.

Warning: this function is executed only on DHW tank heaters managed with a temperature probe.

SAFETY DEVICES AND FUNCTIONS

3-bar safety valve

This valve is installed on DHW pipe, and checks that pressure does not exceed 3 bar as this condition would entail boiler inner problems.
Should valve read a pressure higher than the allowed limit, it will open to discharge water outside.

Low water pressure switch (E04 shutdown)

The water pressure switch is constantly checked. If it is open (with pressure lower than 0.5 bar), a signal of insufficient pressure (E04) is sent, the pump is immediately disabled and the operation requests are ignored.
Even the multifunction relay power supply is interrupted (if selected with P17=1 or P17=3).
If the pressure switch contact closes, the standard operation is restored.

Flue gas thermostat (E03 shutdown)

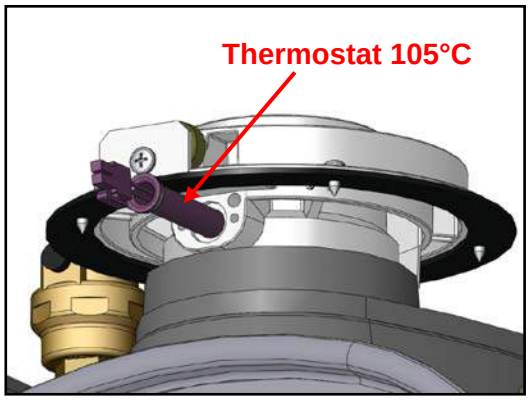

The flue gas thermostat (inserted in the discharge tower) is a normally closed contact connected in series with the gas valve operator, and is directly managed by the automatic flame control.
When the contact is open, the gas valve power supply is immediately interrupted, and if it remains open for a time > TW+TS, the boiler enters the non-volatile shutdown condition with indication of E03 error on the display. If the flue gas thermostat remains open for a time lower than TW+TS, the burner is temporarily switched off but NOT in the non-volatile condition, and upon contact closure the standard operation is restored.
The flue gas thermostat is acknowledged and managed only in presence of a burner ignition request.

Flue gas temperature limiting *function* (shutdown E88)

For safety reasons the primary exchanger body can not operate with flue gas temperature higher than 150°C. Such temperature is detected and monitored by a flue gas probe placed on the exchanger body (see following image).
This function progressively limits the burner maximum power proportionally to the flue gas temperature limit approach on the exchanger, so as to reduce the flue gas temperature. During power limitation (with P90=1) the boiler display shows the E88 error.

***Flue gas temperature check* function (E89, E90 and E91 shutdown)**

Such function provides two check types:

- *Flue gas probe wholeness check.*
  It checks that with burner ON the flue gas probe detects a value higher than the return probe temperature - 15°C.
  If within 900 sec. the condition is not complied with, a permanent shutdown occurs and the boiler display shows the E89 error.

- *Flue gas maximum temperature check.*
  It checks that with burner ON the probe detects a value lower than the allowed flue gas maximum temperature (150°C).
  If within 10 sec. the condition is not complied with, a burner shutdown occurs and the boiler display shows the E90 error. The boiler can be switched on again just once without using the keys; then the shutdown becomes permanent.

During all checks this function considers the possibility to have a high flue gas maximum temperature derivative value, with consequent burner shutdown with E91 fault.

Warning: Permanent shutdowns can not be reset by the user, but only by the technical service by pressing contemporaneously the three function keys for at least 10 sec.

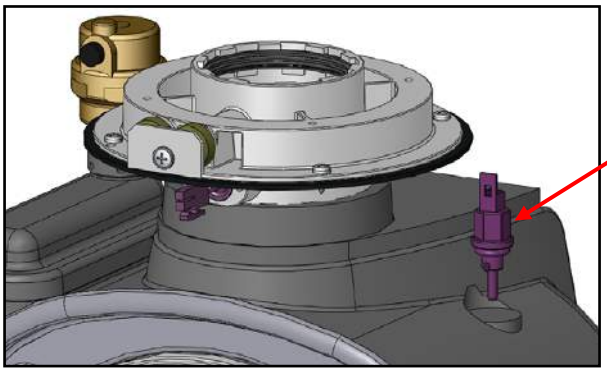

Spare flue gas probe part no.
6SONDNTC08

Correct oper. range
-20°C ÷ +180°C

Double flow probe (E02 shutdown)

The overtemperature check is carried out by the double probe placed on the flow pipe instead of the standard safety contact thermostat.
When reaching 105°C, the gas valve power supply is immediately interrupted, with consequent indication of E02 error in the display.
To reset use the relevant key when the flow temperature reaches 90°C.

In case of E02 shutdown:
the fan performs a post-ventilation cycle at the ignition speed (P3) + 900 rpm until the flow temperature falls below 90°C.
The pump performs a post-circulation cycle with deviating valve in heating position if before the shutdown there was a heating, flow-return anti-freeze, or flue cleaning function request. The pump performs a post-circulation cycle with deviating valve in DHW position, if before the shutdown there was a DHW or DHW anti-freeze function request.

With P17=1 or P17=3, the multifunction relay performs a post-circulation if it was excited before the shutdown.

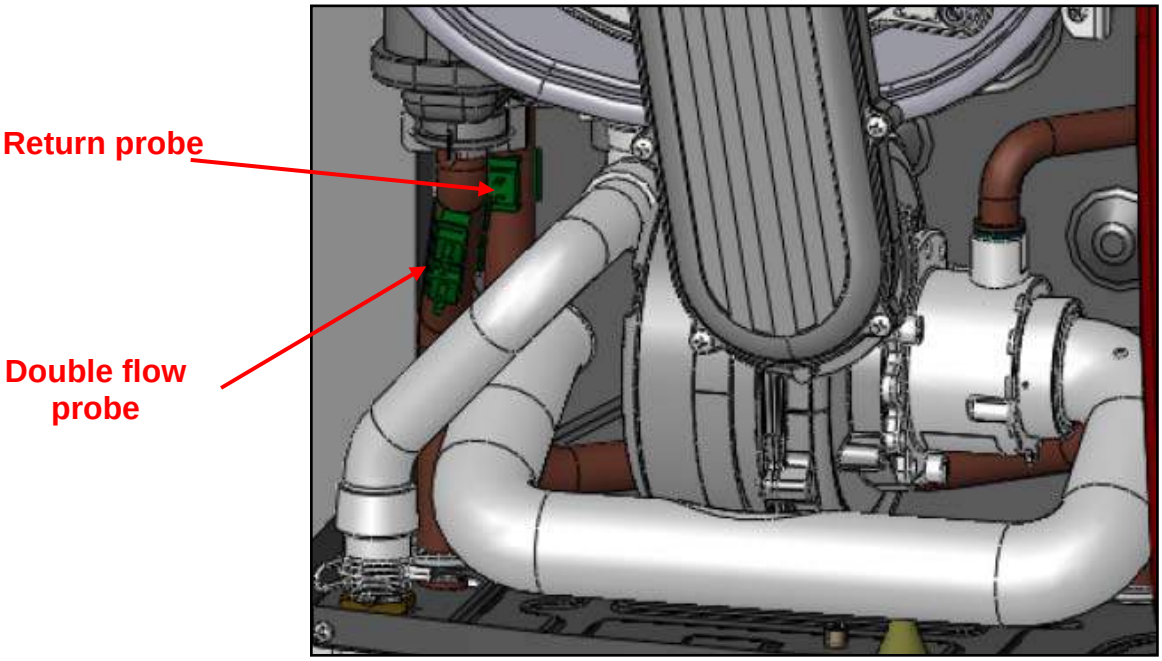

Maximum flow and return deviation check function (E80 shutdown)

Such check is carried out before each burner ignition request different from the "*instantaneous DHW*" one.

After the pump activation, wait 10 seconds and then check the temperature differential which must be between the range specified below:

$$\Delta Tmin < (Tflow - Treturn - \Delta T\_Offset) < \Delta Tmax$$

where,

ΔTmin: minimum differential value (- 8°C)
ΔTmax: maximum differential value (+ 8°C)
Tflow: temperature read by the flow probe
Treturn: temperature read by the return probe
ΔT_Offset: probe error differential value (~ 0°C)

As soon as the calculated *ΔT* is within the specified range, the burner receives the ignition consensus. If this does not happen within 60 seconds, the check system forces the boiler shutdown with consequent indication of the E80 error on the display (resettable by the user).

During the E80 shutdown, the fan carries out a 6-minute post-ventilation cycle, and the boiler pump enables its post-circulation function with deviating valve in the position relevant to the type of request. The multifunction relay performs a post-circulation cycle if it was excited before the shutdown.

Water flow check function (E81, E82, E83 and E84 shutdown)

Such function is active only with burner ON, and constantly monitors the water flow inside the primary exchanger.

For a correct operation of the boiler, the minimum flow rates must comply with the values specified below:

Power	Flue gas side modules	Water side modules	Water flow rate to be ensured
[kW]			[l/h]
24Kw	3+1	2+2	**400**
28 kW	4+1	3+2	**600**

The check is based on the difference (*ΔT*) between the flow temperature and the return one according to the fan power. If such difference exceeds the minimum allowed threshold the burner enters in shutdown.

There are triggering thresholds at different rates that progressively reduce the burner operation time at specific switching on/off time.
The intermittence time (ON-OFF) activated during the heating, anti-freeze or flue cleaning requests, are different from those activated during the plate DHW or water heater modes.

Following is an overview of the different situations:

Power	Type of request	Limit water flow rate	Burner ON time	Burner OFF time	Error
[kW]		[l/h]	[min]	[min]	
24 kW	Heating, anti-freeze, flue cleaning	**367**	3	1	E81
		333	2	2	E82
		300	1	3	E83
	Plate DHW, boiler	**367**	3	5	E81
		333	2	5	E82
		300	1	5	E83
28 kW	Heating, anti-freeze, flue cleaning	**550**	3	1	E81
		500	2	2	E82
		450	1	3	E83
	Plate DHW, boiler	**550**	3	5	E81
		500	2	5	E82
		450	1	5	E83

The burner is completely switched off (0 min ON) if in the worst case (300 or 450 l/h) the flow and return temperature derivative values are both lower than 0.5°C/sec. In this case the reference error is E84.

Warning: E81, 82, 83 and 84 errors are not indicated on the boiler display by default. To display them it is necessary to set the parameter P90=1, and the fault can be reset by the user by means of the "reset" key.
During the water flow checks and the relevant burner switching on and off operations, the pump remains always powered.

SECT. 6
ELECTRICAL SYSTEM

6.1 ELECTRONIC BOARD

Spare part number: **6SCHEMOD30**

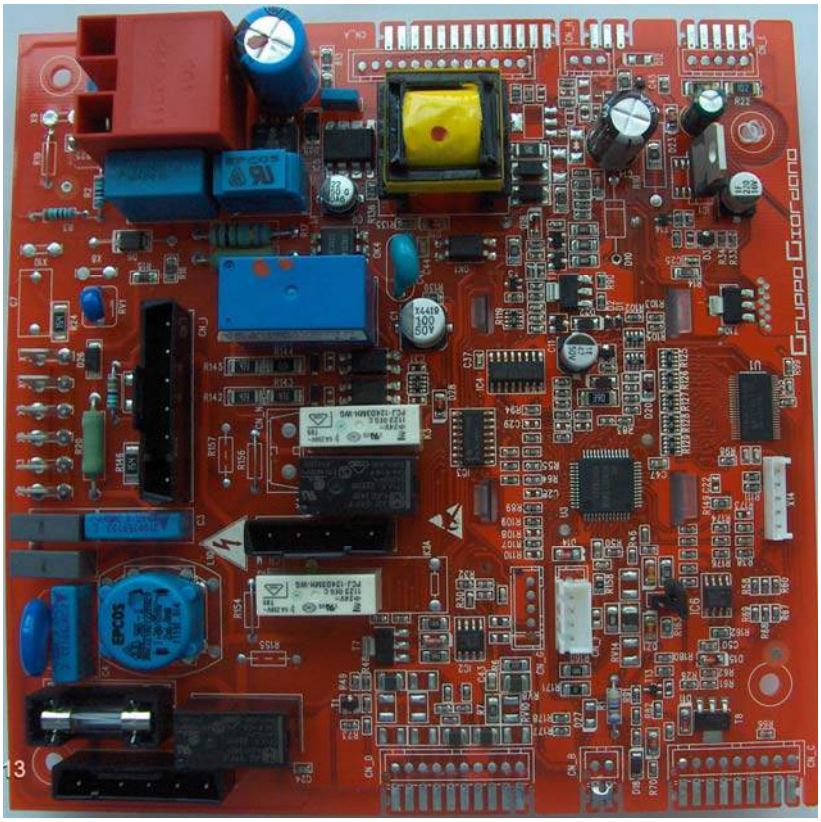

Board characteristics

Operating voltage:	170 Vac to 300 Vac
Power supply frequency:	45 – 66 Hz
Protection class:	IP00
Protection fuse:	5x20 2AF
Ionisation current:	1.2 µA
Flame detection method:	ionisation
Type of detection:	non-polarized

LCD characteristics (board back)

No. of digits:	5 (3 + 2)
Backlighting:	yes
Background:	green

6.2 OUTER TERMINAL BOX ELECTRICAL CONNECTIONS

All electric connections must be made using the terminal board on the back of the control panel.
For the additional board (used to manage zones or complex solar systems) there is a specific location on the back of the control panel:

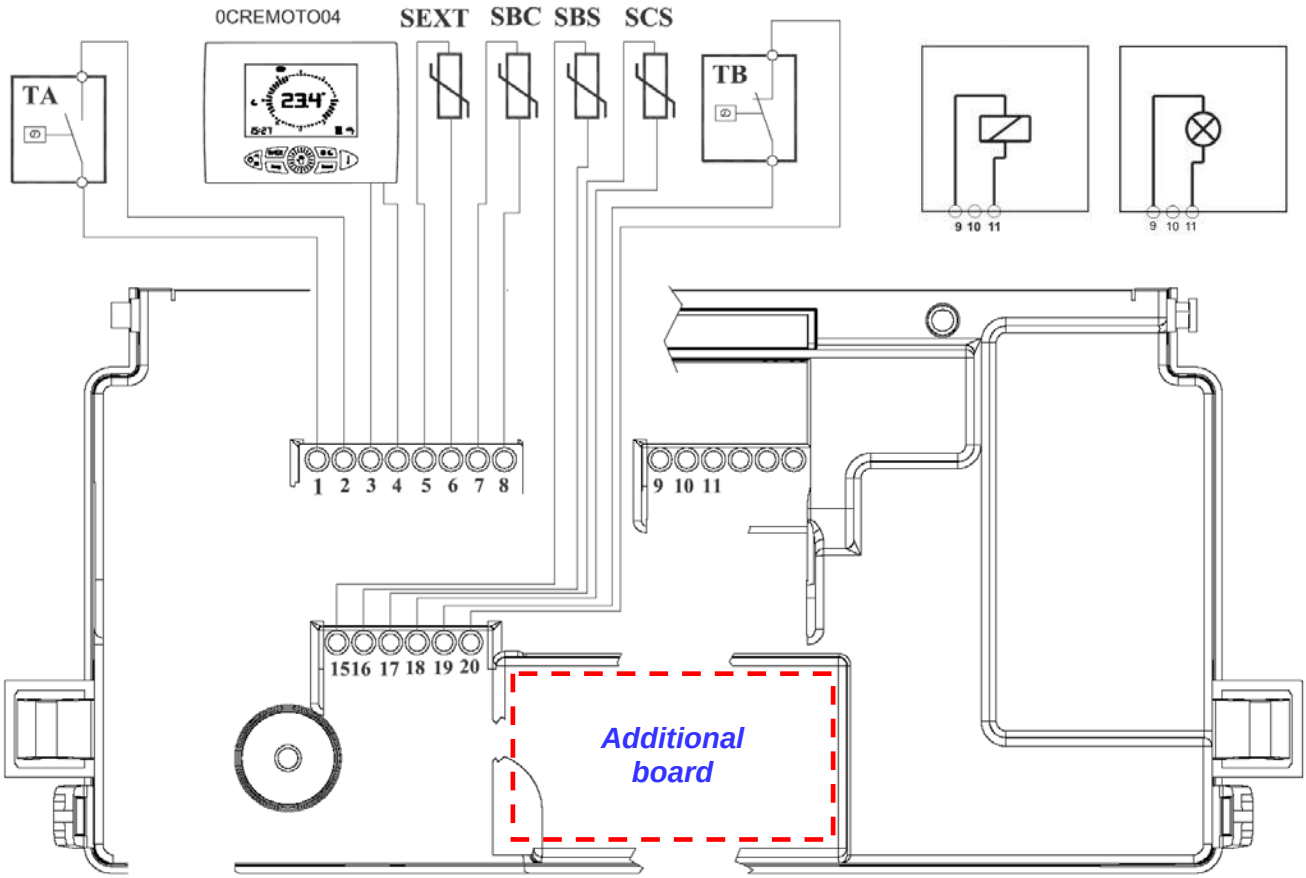

Connections reference

- **1-2** room thermostat 2
- **3-4** room thermostat 1 or remote control (L≤30m)
- **5-6** outside probe (10K Ohm at 25°C B3977 L≤100m)
- **7-8** boiler water tank probe *SBC* for KRB version (10K Ohm at 25°C B3435 L≤3m)
- **9** multifunction relay “normally open” phase connection *(NA)*
- **10** multifunction relay “normally closed” phase connection *(NC)*
- **11** multifunction relay neuter connection
- **15-16** solar water tank probe *SBS* (PT1000 L≤3m)
- **17-18** solar panel probe *SCS* (PT1000 L≤100m)
- **19-20** timer or water tank thermostat only for KRB version

Warning: for complex solar systems, the solar valve probe *(SVS)* must be connected to the additional board.

6.3 WIRING DIAGRAM

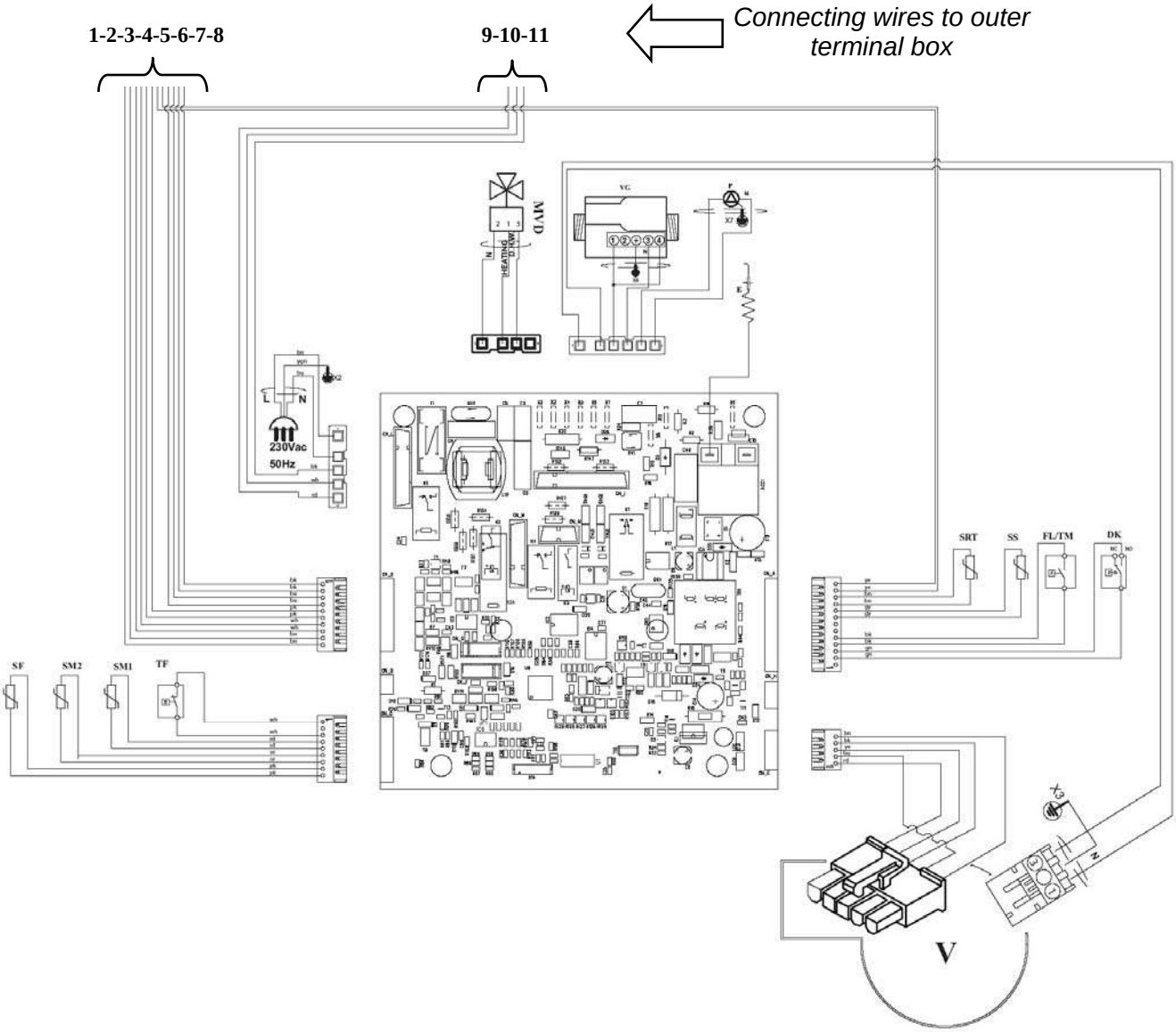

Key:

DK:	low water pressure switch	SF:	NTC flue gas 10K Ohm
FL/TM:	flow switch	MVD:	motorised deviating valve
SS:	NTC DHW probe 10K Ohm	VG:	gas valve
SRT:	NTC return probe 10 K Ohm	P:	boiler circulation pump
TF:	flue gas thermostat	V:	fan
SM1:	NTC heating probe 1 10K Ohm	X2-X7:	ground connectors
SM2:	NTC heating probe 2 10K Ohm	MOD:	gas valve modulation coil

Connections to be made by the installer (ON OUTER TERMINAL BOX)

TA (pins 1-2): ambient thermostat (clean contact free from potential)
OT (pins 3 -4): remote control (shielded wires< 30 m)
SEXT (pins 5-6): NTC external probe 10K Ohm
Multifunction relay: pin 9: phase, normally open
pin 10: phase, normally closed
pin 11: neutral

SECT. 7

VENT DUCTS AND PIPES

For the air intake/flue gas venting systems, specific, manufacturer approved, condensate acid-resistant pipes and systems must be used, suitable for condensing boilers.
Flue gas venting pipes are to be installed tilted toward the boiler so that condensate runs toward the combustion chamber, which is designed for condensate collection and drainage.
Should the above procedure not be possible, it is necessary to install, in condensate stagnation areas, devices designed for condensate collection and conveying to the condensate drain system.

7.1 100/60 CO-AXIAL AIR/VENT DUCTS

Installation type: C13 - C33

*Pipe maximum length**

TYPE OF INSTALLATION	PIPING MATERIAL		KRB 12	KC-KRB 24	KC-KRB 28
	Air intake	**Flue gas vent**	**L max [m]**	**L max [m]**	**L max [m]**
C13 – C33	aluminium	polypropylene	9.0	10.0	9.0

* the first elbow from the boiler is not to be accounted for

Flue fitting load loss

Component	KCK-RB 12 - 24 - 28
	[m]
Extension 1 m	1.0
Extension 0.5 m	0.5
90° elbow	1.0
45° elbow	0.5
Roof vent terminal	1.5
Wall terminal kit + 90° elbow	1.5

WARNING: *Maximum allowed length, 0.75 metres.*

Dimensions for connection of flue gas duct to co-axial ducts

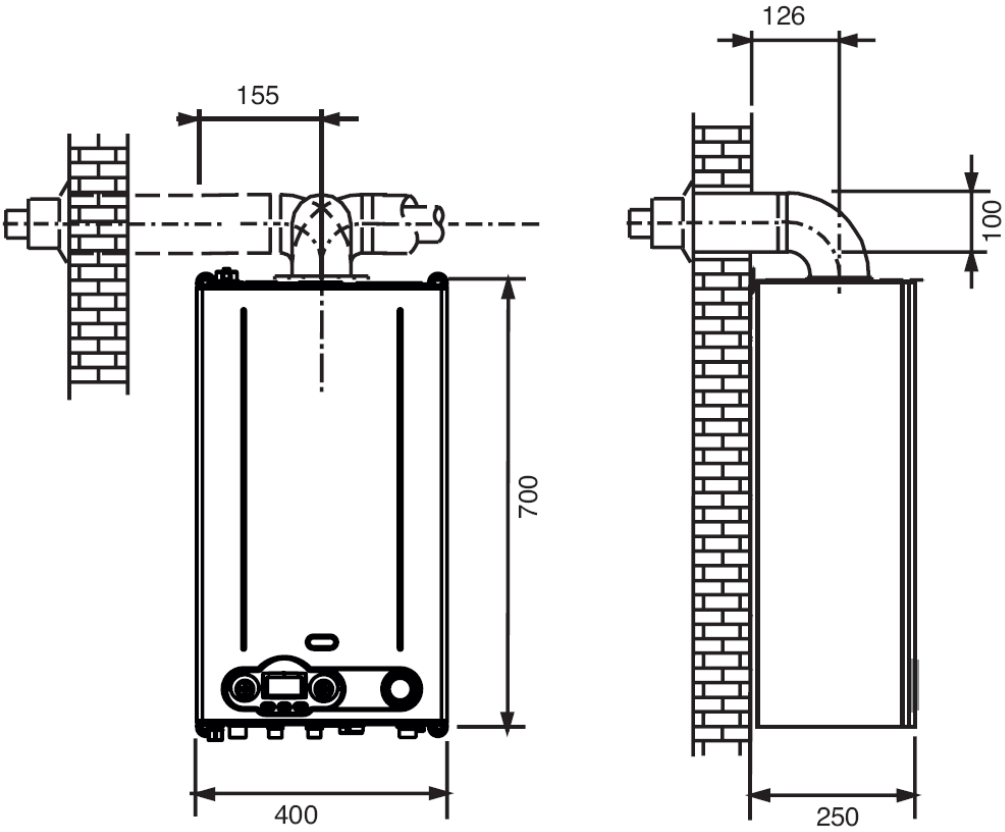

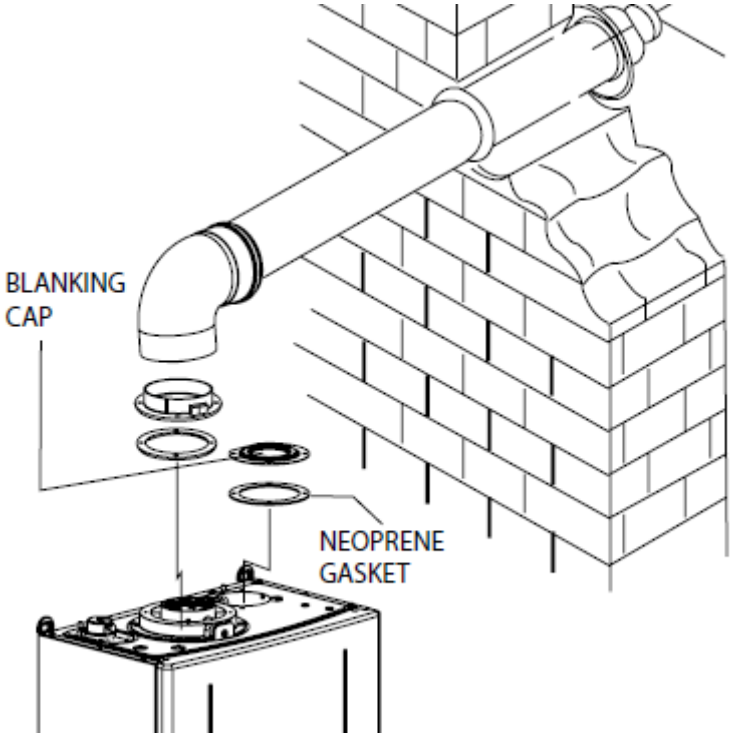

7.2 125/80 CO-AXIAL AIR/VENT DUCTS

Installation type: C13 - C33

*Pipe maximum length**

TYPE OF INSTALLATION	PIPING MATERIAL		KRB 12	KC-KRB 24	KC-KRB 28
	Air intake	**Flue gas vent**	**L max [m]**	**L max [m]**	**L max [m]**
C13 – C33	aluminium	polypropylene	13.5	14.5	13.5

* The first elbow from the boiler is not to be accounted for

Flue fitting load loss

Component	KCK-RB 12 - 24 - 28
	[m]
Extension 1 m	1.0
Extension 0.5 m	0.5
90° elbow	1.0
45° elbow	0.5
Roof vent terminal	1.5
Wall terminal kit + 90° elbow	1.5

7.3 80/80 SPLIT AIR/VENT DUCTS

Pipe maximum length

Type of installation: C43 - C53 - C83*

TYPE OF INSTALLATION	PIPING MATERIAL		KRB 12	KC-KRB 24	KC-KRB 28
	Air intake	**Flue gas vent**	**L max [m]**	**L max [m]**	**L max [m]**
C43 – C53 – C83	aluminium	polypropylene	152	84	91

* The minimum length of intake and discharge line must be one meter

Type of installation B23 - B53*

TYPE OF INSTALLATION	PIPING MATERIAL		KRB 12	KC-KRB 24	KC-KRB 28
	Air intake	**Flue gas vent**	**L max**	**L max**	**L max**

			[m]	[m]	[m]
B23; B53	----	polypropylene	152	84	91

* The minimum length of discharge line must be one meter

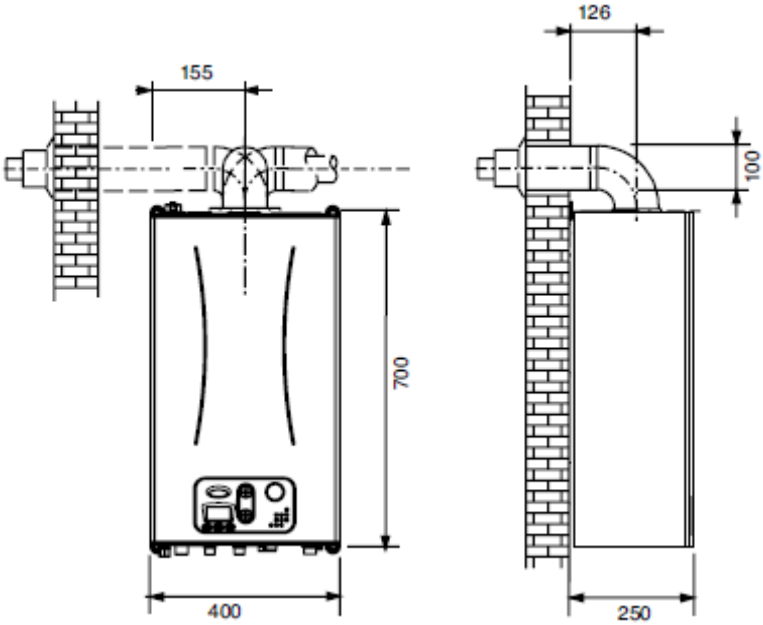

80/80 split duct load loss table

Part	**Vent [m]**		**Intake [m]**	
	24 kW	**28 kW**	**24 kW**	**28 kW**
Wall vent terminal	5	5.5	-	
1 m extension	1		1	
0.5 m extension	0.5		0.5	
90° elbow	1	1.5	1	1.5
45° elbow	0.5	1	0.5	1
80 mm tee with condensate discharge	1		-	
80 mm tee	1		1	
0.45 m telescopic extension	0.5		0.5	
Flue gas intake/vent chimney Ø 80+80	5.5		-	
Flue gas vent chimney Ø 80	5.5		5.5	
Hose 1 m	1		1	

Doubling base kit: **0KITSDOP00**

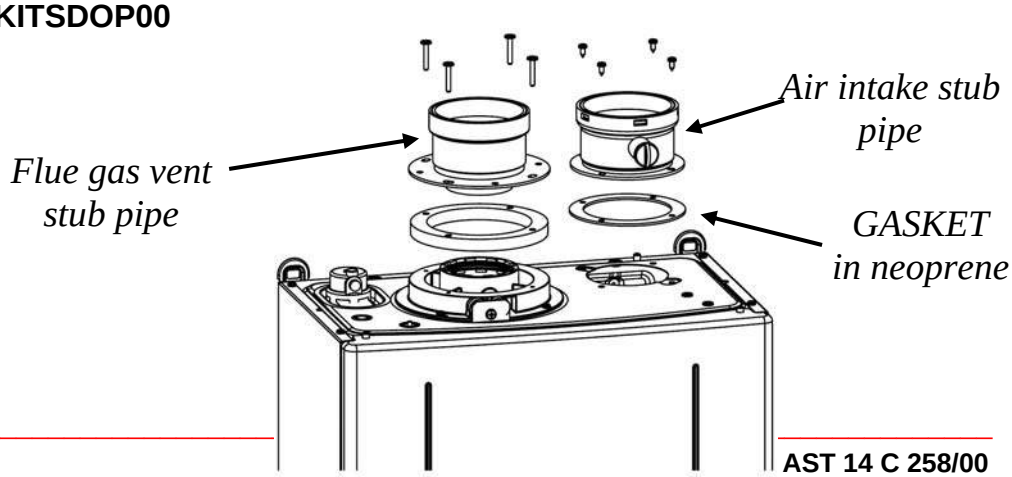

7.4 Ø 60 SPLIT VENT DUCT

Pipe maximum length

Type of installation B23 - B53*

TYPE OF INSTALLATION	PIPING MATERIAL		KRB 12	KC-KRB 24	KC-KRB 28
	Air intake	**Vent Flue gas**	**L max [m]**	**L max [m]**	**L max [m]**
B23; B53; C63	----	polypropylene	39	23	23

* The minimum length of discharge line must be one meter

Ø 60 duct load loss table

Part	**Vent [m]**			**Intake [m]**		
	12 kW	**24 kW**	**28 kW**	**12 kW**	**24 kW**	**28 kW**
Wall vent terminal	4	4.5		-		
1 m extension	1			1		
0.5 m extension	0.5			0.5		
90° elbow	1			1		
45° elbow	0.5			0.5		
60 mm tee with condensate discharge	0.5			-		
60 mm tee	0.5			0,5	1	

NOTES

TABLE OF TECHNICAL FAULTS

Boiler Status	Malfunction	Probable cause	Solution
Boiler shutdown, picture flashes: E01	Burner does not ignite	Gas supply failure	Check gas pressure Check gas supply cock or gas network safety valve intervention
		Gas valve is disconnected	Re-connect it
		Gas valve is faulty	Replace it
		The board is faulty	Replace it
	Burner does not ignite: there is no spark	Ignition relay is faulty.	Replace the electrode
		Ignition transformer is faulty.	Replace the ignition transformer.
		Electronic board does not ignite. It is faulty	Replace the board
	Burner ignites for a few seconds and goes off	Electronic board does not detect flame: inverted phase and neutral	Verify correct neutral and phase connection sequence
		Detection electrode cable interrupted	Re-connect or replace cable
		Flame detection electrode is faulty	Replace the electrode
		Electronic board does not detect flame: it is faulty	Replace the board
		Ignition heat input setting is too low	Increase it
		Minimum heat input is not set correctly	Check burner setting
Boiler shutdown, picture flashes: E02	The flow double probe check has been triggered	CH water does not flow in the system: pipes might be clogged, thermostatic valves might have shut, system stopcocks might be closed	Check system status
		Circulation pump is blocked or faulty	Check the circulation pump
		One of the two flow probes is faulty.	Check flow probes.
Boiler shutdown, picture flashes: E03	The flue gas thermostat does not give the consensus.	Air intake or flue gas discharge flow is nor correct.	Check air intake/flue gas vent ducts: clean or replace if necessary.
		Flue gas thermostat is faulty	Check flue gas thermostat: replace it if faulty.
		Combustion fan is not working properly.	Check the fan.
		The board is faulty	Replace it

Boiler shutdown, picture flashes: E04	CH system water pressure is low	Low water inside heating system	Fill up system
		Leaks in the CH system	Check system
		Water pressure switch is disconnected	Re-connect it
		Water pressure switch is not operating: it is faulty	Replace it
Boiler shutdown, picture flashes: E05	One of the two flow probes is faulty	One of the two probes is disconnected or in short-circuit	Reconnect or replace it
		Between the two probes there is a temperature difference higher than 8°C	Check the not correctly set probe and replace it
Boiler shutdown, picture flashes: E06	DHW probe is not working	Disconnected or short-circuited probe	Reconnect or replace it
Boiler is not supplying DHW	DHW flow switch is not working	System insufficient pressure or flow rate	Check system
			Check DHW flow switch filter
		DHW flow switch probe is faulty or disconnected	Connect or replace it
Boiler shutdown, picture flashes: E07	Flue gas probe is faulty	Disconnected or short-circuited probe	Reconnect or replace it
Boiler shutdown, message flashing: E 12	Failure on tank heater probe (KRB)	Probe disconnected or short-circuited	Reconnect the probe or replace it, if necessary.

Boiler shutdown, picture flashes: E15	Return probe not working	Disconnected or faulty probe	Reconnect or replace it

Boiler shutdown, message flashing: E23	External probe not working	Probe disconnected or faulty	Reconnect the probe or replace it, if necessary.
Boiler shutdown, message flashing: E24	Failure on the solar collector probe SCS *(connected to the boiler board)*	Probe disconnected or faulty	Reconnect the probe or replace it, if necessary.
		The probe detects a value outside the permitted range	Check the probe is the PT1000 type.
Boiler shutdown, message flashing: E27	Failure on the solar valve probe SVS *(connected to the supplementary solar board)*	Probe disconnected or faulty	Reconnect the probe or replace it, if necessary.
		The probe detects a value outside the permitted range	Check the probe is the PT1000 type.
Boiler shutdown, message flashing: E28	Failure on the solar tank heater probe SBS *(connected to the boiler board)*	Probe disconnected or faulty	Reconnect the probe or replace it, if necessary.
		The probe detects a value outside the permitted range	Check the probe is the PT1000 type.
Boiler shutdown, picture flashes: E31	The boiler does not communicate with the Remote Control	The connection with the Remote Control is interrupted.	Check the Remote Control connections (wiring longer than 5 meters must be shielded)
		Remote control is faulty	Replace the Remote Control
Boiler shutdown, message flashing: E35	Safety thermostat intervention on mixed zone 2	The safety thermostat is faulty or electrically disconnected	Replace the thermostat, or reconnect the wiring.
		Flow temperature too high	Check the boiler settings, or correct operation of the mixer valve.

Boiler shutdown, message flashing: E36 02	Failure on the mixed zone flow probe *(showing the zone number)*	Probe disconnected or faulty	Reconnect the probe or replace it, if necessary.
		The probe detects a value outside the permitted range	Check the probe is the NTC type.
Boiler shutdown, picture flashes: E40	The fan rpm value does not correspond to the required ones	Obstructions inside the flue gas duct	Check for any obstruction inside the flue gas duct
		Faulty fan	Replace the fan
		Faulty boiler board	Replace boiler board
	Fan is faulty	Fan wrongly connected.	Check connections
		Fan is faulty	Replace it
Boiler shutdown, message flashing: E41	No communication between main board and additional boards	The main board cannot find all the additional boards, or it finds more than are actually connected	Check the value of parameter P60 - it must correspond to the number of additional boards used.
Boiler shutdown, message flashing: E42	Hydraulic configuration not allowed	The main board does not recognise the probes connected for correct operation	Check the value of board configuration parameter P3.
Boiler shutdown, message flashing: E51 E52	Safety circuit hardware failure (fan relay)		Replace the main board.
Boiler shutdown, message flashing: E53	Safety circuit hardware failure (gas valve relay)		Replace the main board.
Boiler shutdown, picture flashes:	Maximum deviation between flow and	Flow or return probe fault	Replace the faulty probe

E80	return lines	Flow or return probe disconnected from the pipe	Reconnect the probe
		Air inside the system	Bleed the system
		Faulty or clogged by-pass	Check the by-pass
In the board memory (from P51 to P55) is indicated what specified below: E81 E82 E83 E84	Insufficient water flow rate inside the primary exchanger body	Primary exchanger clogging	Clean or replace the primary exchanger
		Air inside the system	Bleed the system
		Faulty or clogged by-pass	Check the by-pass
		Too low system pressure	Restore the pressure
Boiler shutdown, picture flashes E86	Flow maximum threshold exceeded	Air inside the boiler	Bleed the boiler by opening the outlets on exchanger and pump
Boiler shutdown, message flashing: E87	Maximum flow threshold exceeded	Air inside the boiler	Bleed the boiler by opening the outlets on the heat exchanger and pump.
		Circulation of extraneous hot water in the boiler	Check there are no other boilers in a cascade connection, or supplementary sources.
In the board memory (from P51 to P55) is indicated what specified below E88	Power reduction for flue gas high temperature	Primary exchanger clogging	Clean or replace the primary exchanger

Boiler shutdown, picture flashes E89	Flue gas probe reading error	The probe is not set correctly or properly connected to the pipe	Replace it

Boiler shutdown, picture flashes E90 E91	Flue gas maximum threshold exceeded	Primary exchanger clogging	Clean or replace the primary exchanger
		Flue gas side clogging of primary exchanger and flue gas duct	Check for obstructions inside the flue gas duct or clean the primary exchanger
Boiler shutdown, picture flashes: E99	Max. number of resume attempts from remote control exceeded	Presence of one error that can not be reset	Work directly on the boiler

IF NONE OF THESE HYPOTHESIS IS VALID, FAILURE IS ORIGINATED BY MAIN ELECTRONIC BOARD. YOU CAN JUST CHECK CONNECTIONS OR DIRECTLY THE BOARD ITSELF.

FONDITAL GROUP

Delfis-Antea Condensing Technic Manual

Customer Service Department

1st edition, February 2013

AST 14 C 258 – 00